Series 45 Carbon Composition Potentiometers

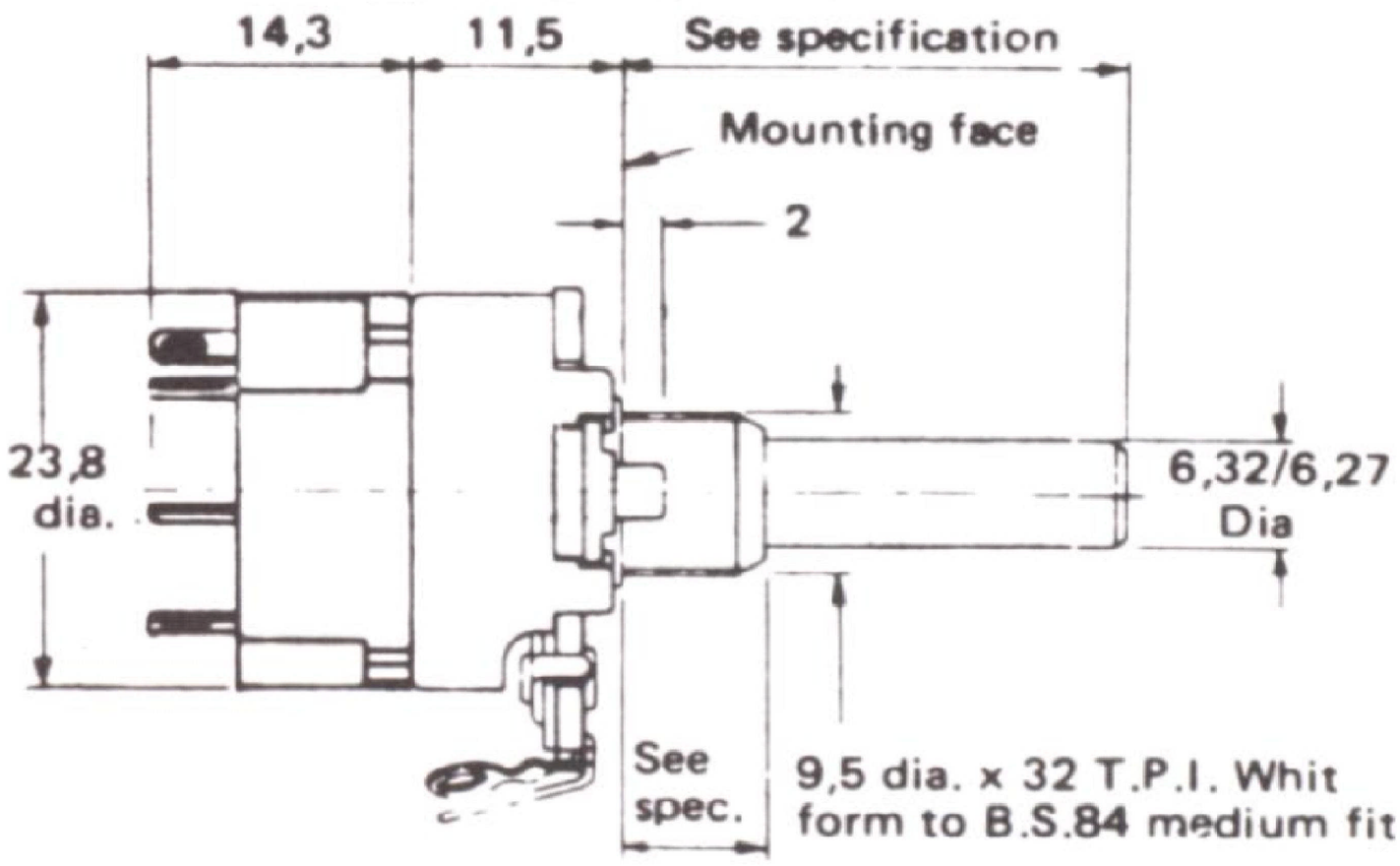

Terminals
Wirewrap, solder lug, printed circuit.

Mounting Details
Bush 9,5mm diameter diecast bush, 32 TPI Whitworth form (BS.84) medium fit, 7,9mm long. Locating key left (terminals down viewed from spindle end) fits into a 3,2mm diameter hole on a 11,1mm radius.
Each control can be supplied with one hexagonal fixing nut and one internal toothed lockwasher.
High Voltage Bush: Bush and operating spindle isolated from all parts of the main control.
Bush: M10 x 0,75 x 8 mm long diecast bush with standard or DIN locating key: bushes of other lengths and in other materials can be made available.

Mechanical Rotation
300° ±5° without switch,
320° ±5° with switch

Operating Torque
0,7 – 3,6 Ncm

End Stop Torque
113 Ncm. minimum

Resistor Adjustment
Integral moulded spindle
Plug in metal spindle
Integral metal spindles (outer and inner)
Integral metal spindle (outer) integral moulded spindle (inner)
Lengths, diameters and end configurations as shown on spindle illustrations.

STANDARD RESISTANCE ELEMENT DATA

Standard resistance values (Ω)	Maximum power (W)	Maximum working voltage (V)	Max.current through element at 40°C (mA)	Standard resistance values (Ω)	Maximum power (W)	Maximum working voltage (V)	Max.current through element at 40°C (mA)
500	0.5	15.8	31.6	100K	0.5	224	2.2
1K	0.5	22.4	22	250K	0.5	353	1.4
2.5K	0.5	35.3	14	500K	0.5	500	1.0
5K	0.5	50	10	1M	0.5	500	0.05
10K	0.5	70.7	7.1	2.5M	0.5	500	0.02
25K	0.5	111.8	4.5	5M	0.5	500	0.01
50K	0.5	158	3.2	10M	0.5	500	0.005

DERATING CURVE

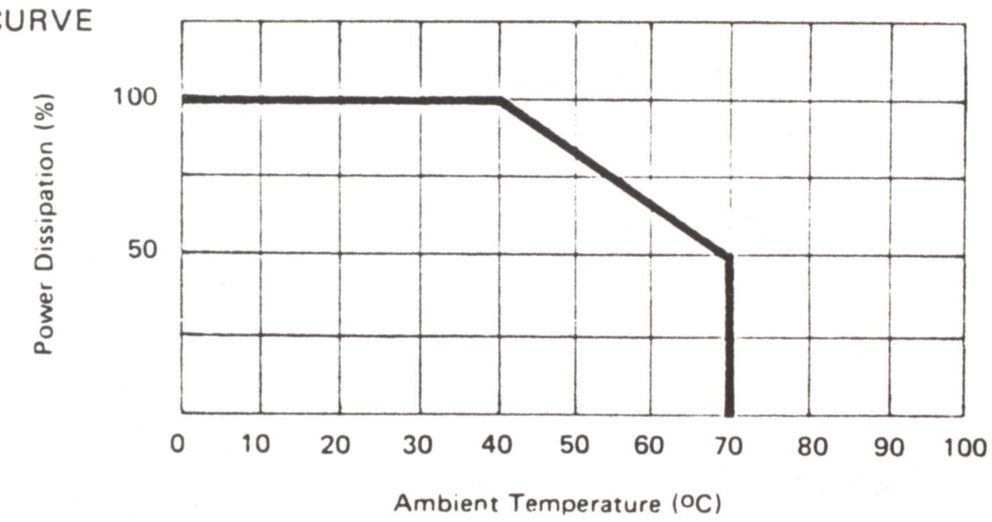

ELECTRICAL SPECIFICATION

Effective Rotation
270° ±5°

Resistance Range
500 Ω to 10M Ω linear
1K Ω to 10M Ω log
Lower resistance values to special order

Resistance Tolerance
Standard ± 20% for values to 1M Ω
± 30% above 1M Ω
Special ± 10%

Laws
Linear, log, semi-log, reverse log
Other special laws available on application, including diode law.

Insulation Resistance
> 5000 M Ω

Voltage Rating
500V d.c. maximum

Terminal Resistance
Linear: .....0.5% R_N
Log: Low slope end 0.5% R_N
High slope end 2.0% R_N
Standard minimum resistance value 5Ω.
Lower terminal resistance down 1Ω can be supplied.
Continental requirements to DIN41450 can be supplied.

Hop On Resistance
Linear: Not greater than 0.5%.
Non-linear: Low slope end of taper - Not greater than 0.1%
High slope end of taper - Not greater than 2.0%

Noise
Rotational noise per volt d.c. applied across the control, when measured in accordance with para. 3.11 of BS.2122 is typically 0,75 mV r.m.s. and will not exceed 2 mV r m.s.
On linear controls hop on and hop off areas will be discounted.
On non linear controls the high end hop off area will be discounted.

Voltage Proof:
1.5 kV peak minimum

Taps
Single intermediate tap at 40%, 50% or 60% effective rotation.
Double taps at 35% and 65% effective rotation.

Tap Resistance Tolerance
Standard ± 30%
N.B. It is important that customers specify tap parameters in terms of:–
(a) Value and tolerance at tap
(b) Function whether specific resistance or output ratio.
(c) Maximum and minimum values of minimum contactor to tap resistance

Temperature Range
–25°C to 70°C

Temperature Coefficient
Typically ± 500 p.p.m.

Power Rating at 40°C Ambient Temperature
0.5 Watts linear
0.25 Watts log

Matching
Controls can be supplied matched to the following limits:
Standard A: Linear law 3dB matching from 20dB attenuation
Log law 3dB matching from 32dB attenuation
Standard B: Linear law 2dB matching from 20dB attenuation
Log law 2dB matching from 32dB attenuation
Standard C: Linear law 2dB matching from 30dB attenuation
Linear tapped (no minimum tapped resistance specified)
2dB matching from a point equivalent to 30dB attenuation on a non-tapped control; specified as an attenuation point when taking into account external resistors, the values of which are advised by the customer.
Log law 2dB matching from 46dB
Specials: Continental requirements:
Linear law 3 or 2dB matching from 30° rotation (nominal 25dB attenuation)
Log law 3dB matching from 30° rotation (nominal 36dB attenuation)

Mains Switch – Type AR
Each control is supplied with a double pole, single throw mains switch operating in 25° rotation of the control spindle.
In the standard construction the switch is 'OFF' in the fully anti-clockwise position of the spindle.
The switch is rated at 2 Amps/250V a.c., with a surge rating of 64 Amps.
Clearance and creepage distances conform to BS.415.
Approvals to SEMKO, DEMKO, NEMKO, C.S.A.