WINSTA®

Full Line Catalog 2008/2009

ELECTRICAL INTERCONNECTIONS

5

WAGO®
INNOVATIVE CONNECTIONS

Contents FULL LINE CATALOG W4, Volume 1 • Rail-Mounted Terminal Block Systems

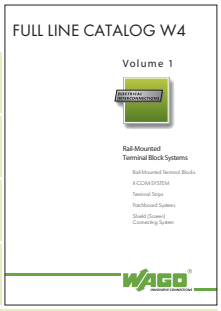

Rail-Mounted Terminal Blocks

X-COM®-SYSTEM

Terminal Strips

Patchboard Systems

Shield (Screen) Connecting System

Contents FULL LINE CATALOG W4, Volume 2 • PCB Terminal Blocks and Connectors

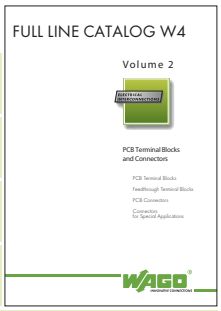

PCB Terminal Blocks

Feedthrough Terminal Blocks

PCB Connectors

Connectors for Special Applications

Contents Full Line Catalog 2008/2009 • I/O SYSTEM

Modular I/O SYSTEM IP20 / IP67

Radio Technology

AS-Interface I/O SYSTEM IP20/67 ; Block I/O SYSTEM IP67

Sensor/Actuator Boxes IP67

Cables and Connectors IP67

Power Supplies

Contents Full Line Catalog 2008/2009 • Interface Modules

Interface Modules

Sensor/Actuator Boxes IP67

Radio Technology

Overvoltage Protection

Power Supplies

Empty Housings and DIN-Rail Mounting Carriers

Contents

1

WINSTA® MINI 890/891 Series, 2 and 3 Poles
Connectors, Snap-In Device Connectors, Distribution Connectors, Cable Assemblies

2

WINSTA® MIDI 770/771 Series, 3, 4, 5, 6 and 7 Poles
Connectors, Snap-In Device Connectors, PCB Connectors,
Distribution Connectors, Cable Assemblies

3

WINSTA® MAXI 831 Series, 5 poles
Connectors

4

WINSTA® RD 774 Series, 3 and 4 Poles
Cable Assemblies

5

WINSTA® KNX 893/894 Series, 2 Poles
Connectors, Snap-In Device Connectors, Distribution Connectors, Cable Assemblies

6

WINSTA® IDC 772/893/895/896/897 Series
Supply and Tap-Off Modules for Flat Cables

7

Tools and Marking Accessories
Screwdrivers, Stripping Tools, Cable Cutters, Stripping Pliers, Marker Strips

8

System Partners
for Lighting Fixtures, Office Furniture, Installations

9

Reference Projects
Office Buildings, Rolling Stock, Marine Applications, Motor Homes, Trade Show Design, ...

10

Technical Section
Coding System, Your Questions - Our Answers, Technical Data,
Item Numbers, Index, Addresses

WINSTA® – New Products

WINSTA® MINI

For use in applications where space is limited

- Sensors (switches, push buttons, window contacts, pressure switches, temperature sensors...)
- Actuators (control valves, magnetic valves, servo motors, blinds/sun protection...)
- Protection class II for halogen lamps and luminaires
- Control signals
- 1.5 mm²/AWG 16, 250 V, 16 A

WINSTA® MIDI

For the majority of applications

- General building installation, especially for modern functional buildings
- Standard lighting fixtures and safety lights
- Tradeshow and shop installation
- Caravan construction
- Lab work stations
- Rolling stock
- Marine applications
- 4 mm²/AWG 12, 250/400 V, 25 A

WINSTA® MAXI

For more power

- Power supply via 6 mm²/AWG 10 cable due to extended cable runs
- 32 A power supply in distribution boxes for high energy demands
- 6 mm²/AWG 10 250/400 V, 32 A

WINSTA® - The perfect connection!

Under-floor distribution boxes

Enhance The System

WINSTA® KNX

For the standardized bus

- KNX/EIB
- Control signals
- Ø 0.8 mm/0.031 in, 50 V, 3 A

WINSTA® IDC

For a high degree of flexibility

- Supply and tap off is possible at any time and at any location from the flat cable. No cutting, no need to remove outer or inner insulation → thus very user-friendly
- A 120° rotation is all that is required to connect the flat cable
- Space saving across the flat cable through longitudinal tap off
- 2.5/4 mm^2/AWG 14/12 400 V, 25 A
- 10 mm^2/AWG 8 690 V, 57 A
- 16 mm^2/AWG 6 690 V, 76 A

WINSTA® RD

For round conduits and ducts

- External diameter of 17.5 mm/0.68 in allows for use in wiring conduits with an internal diameter > 18 mm/0.70 in
- Prefabricated houses
- Recessed luminaires
- Wall and ceiling cutouts

Cable ducts

Lighting

WINSTA® IDC – with **New**

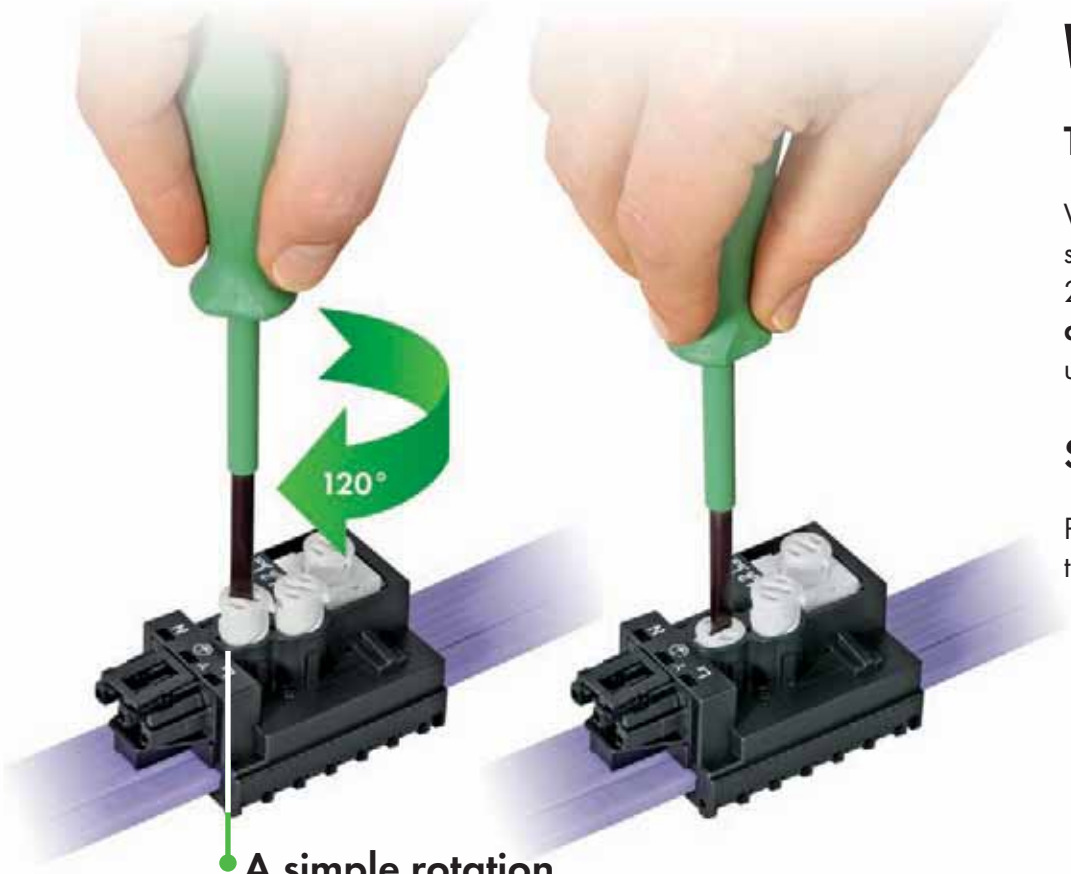

WINSTA® – The

The new dimension

WINSTA® IDC/MIDI,
system for flat cables
2.5 mm²/AWG 14
and 4 mm²/AWG 12
up to 25 A

Space saving

Pluggable tap-off modules **along** the flat cable

A simple rotation connects

The new WINSTA® IDC connectors make connection to flat cables via a fast 120° rotation, at any position, without having to plan in advance.
Flexibility par exellence!

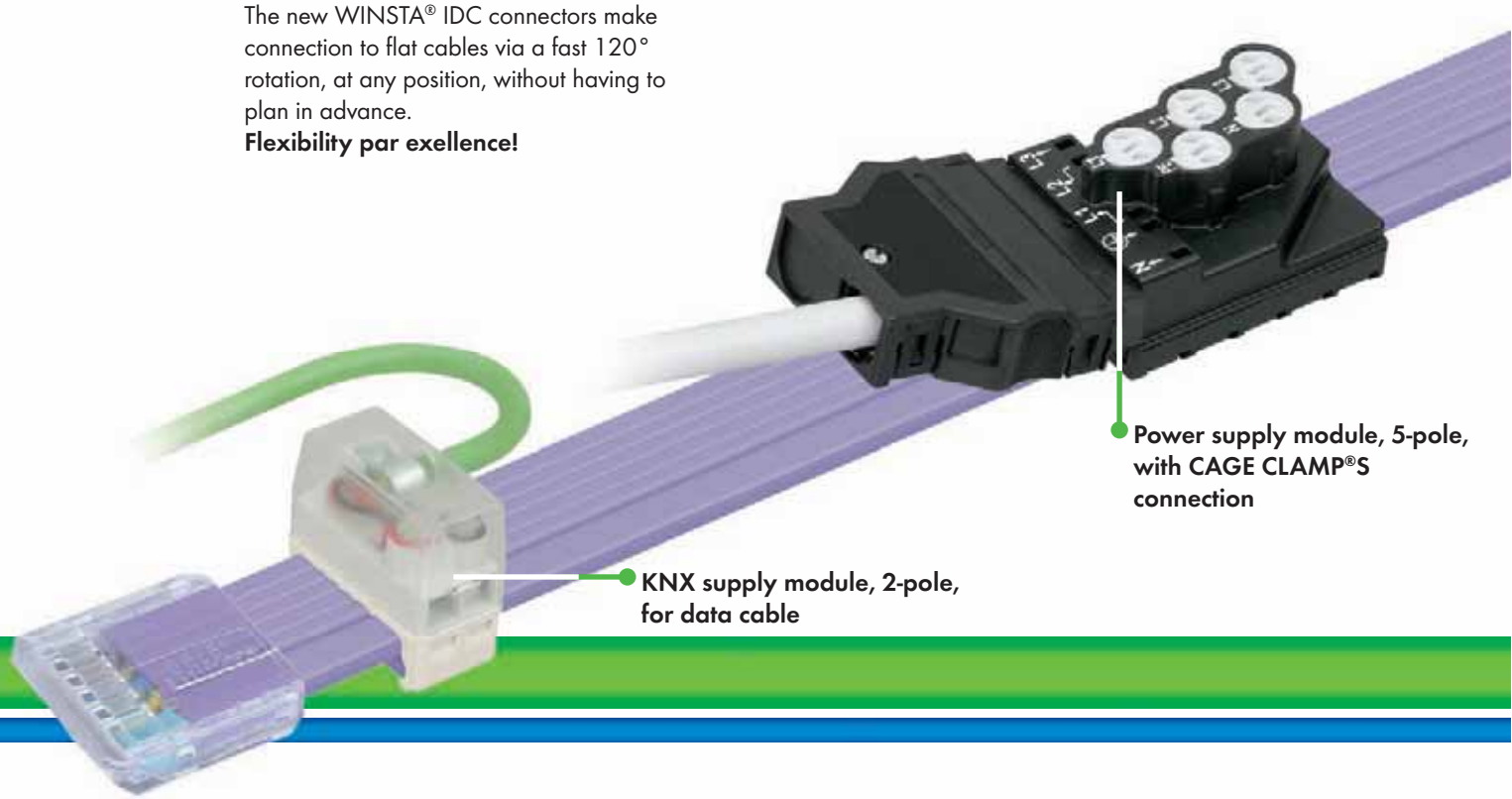

Power supply module, 5-pole, with CAGE CLAMP®S connection

KNX supply module, 2-pole, for data cable

Ideas Perfectly Detailed

Only Choice for Perfect Building Installations

With integrated phase selection

Very important feature, especially for flat cables with long cable runs and a large number of taps off, of differing loads.

Fully insulated

Using tap-off modules from the 772 Series WINSTA® IDC/MIDI system, additional loads can also be connected subsequently **without having to switch off the voltage.**

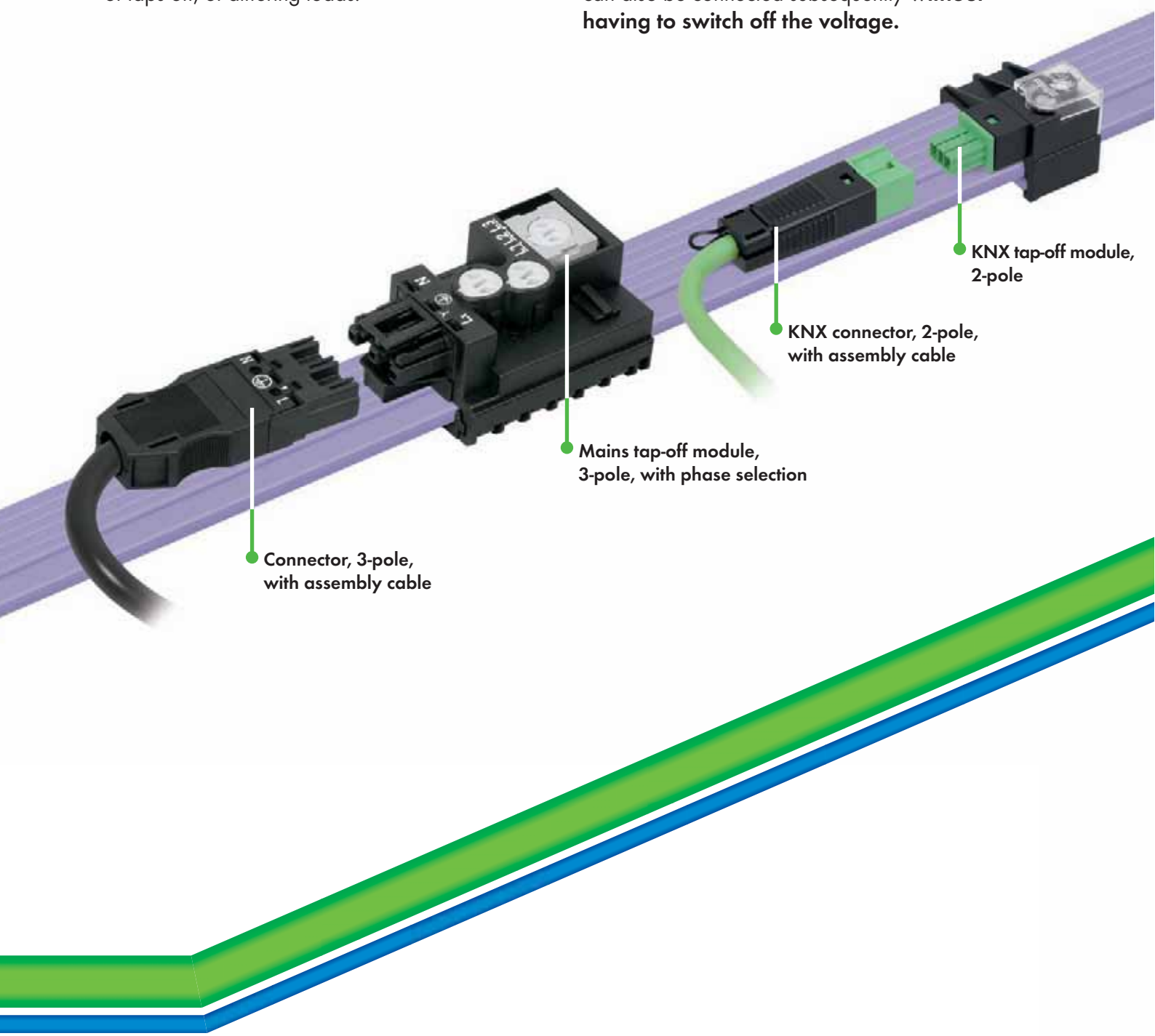

WINSTA® – New **Benefits**

Maximum **Time Savings**

- Completely designed with CAGE CLAMP®S connection
- Quality-checked cable assemblies
- Fast IDC tap-off

Utmost Flexibility

- Product diversity provides individual solutions
- Equal phase loading and simple and easy phase switching if designs change
- Circuit distributors instead of junction boxes

WINSTA® MINI	up to	1.5 mm²/AWG 16	up to	**16 A**
WINSTA® MIDI	up to	4 mm²/AWG 12	up to	**25 A**
WINSTA® MAXI	up to	6 mm²/AWG 10	up to	**32 A**
WINSTA® IDC	up to	16 mm²/AWG 6	up to	**76 A**

for All Applications

Maximum **Safety**

- 100% protected against mismating
- Fixed and variable coding system
- Touch-safe/finger-safe

Optimal **Benefits**

- Receptive to new customer designs and specifications
- Sophisticated logistic support from concept to delivery
- Professional project-related consulting

***WINSTA®*- The perfect connection!**

WINSTA® MINI

890/891 Series up to 1.5 mm² (AWG 16) / 16 A

1

890 Series
Connectors, 2 Poles 10 – 11
Connectors, 3 Poles 16 – 17

890 Series
Snap-In Device Connectors, 2 Poles 12
Snap-In Device Connectors, 3 Poles 18

890 Series
Distribution Connectors, 2 Poles 13
Distribution Connectors, 3 Poles 19

891 Series
Cable Assemblies, 2 Poles 14 – 15
Cable Assemblies, 3 Poles 20

Handling *WINSTA®* MINI 890 Series

Preparation

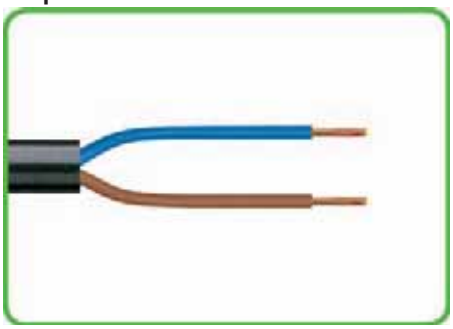

1. Strip length, outer insulation = 30 mm / 1.18 in
2. Strip length = 9 mm / 0.31 in

Wire connection with CAGE CLAMP®S

Actuate the clamp using a screwdriver (blade width 2.5 mm/0.098 in) to connect flexible conductors and insert the stripped conductor up to the stop.
Solid conductors can be plugged directly.

Strain relief assembly

Latch wired connector onto the base of the strain relief housing.

Push down strain relief clamp by hand.

Push down strain relief clamp with a screwdriver (blade width 2.5 mm/0.098 in) alternately on both sides.

Strain relief assembly

Latch the top of the strain relief housing.

Locking lever assembly

All products for fixed installations (snap-in versions, distribution connectors) are equipped with locking levers ex-factory, so that the plugs or sockets are always locked.
Additional locking levers are only required for "flying leads" (plug/socket).

Marking

The printed marking of the connector is clearly visible in the opening of the strain relief housing.

WINSTA® MINI

Sockets and Plugs, 2 Poles

	0.25 – 1.5 mm² ❶ 250 V/4 kV/3 16 A	AWG 22 - 16	0.25 – 1.5 mm² ❶ 250 V/4 kV/3 16 A	AWG 22 - 16
	9 mm / 0.35 in ❷ Approvals		9 mm / 0.35 in ❷ Approvals	

Description	Color	Item no.	Pack.-unit	Color	Item no.	Pack.-unit
Connectors, 2 poles, with CAGE CLAMP®S connection	**Sockets with strain relief housing,** for cable diameter 3.8 - 8.2 mm / 0.15 - 0.32 in			**Plugs with strain relief housing,** for cable diameter 3.8 - 8.2 mm / 0.15 - 0.32 in		
	black	**890-102** ●	50	black	**890-112** ●	50
	white	**890-122** ○	50	white	**890-132** ○	50
Accessories						
Locking levers, tool operated, for "flying leads"	black	**890-111**	100 (2 x 50)	black	**890-111**	100 (2 x 50)
	white	**890-131**	100 (2 x 50)	white	**890-131**	100 (2 x 50)
Operating tool, insulated, 2-way		**890-392**	1		**890-392**	1

Info

❶ Wire range: 0.25 - 1.5 mm² "s + f-st"
0.25 - 1 mm² "stranded"

❷ Approval data can be found in the online catalog at www.wagocatalog.com

●	black	Coding A	(L+ N–)
○	white	Coding A	(L+ N–)
●	gray	Coding B	(1 2)
●	blue	Coding I	(+ –)

Please find some information on the different codings on pages 146 and 147

Dimensions

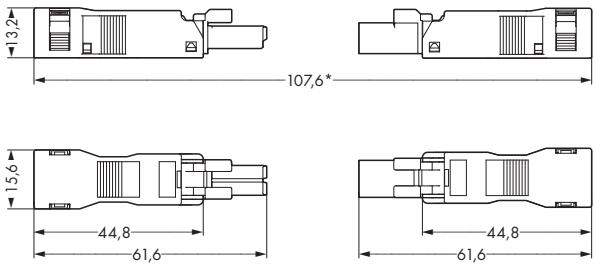

* Overall length of the connectors in mated condition

0.25 – 1.5 mm² ❶ 250 V/4 kV/3 16 A | AWG 22 - 16 9 mm / 0.35 in ❷ Approvals	0.25 – 1.5 mm² ❶ 250 V/4 kV/3 16 A | AWG 22 - 16 9 mm / 0.35 in ❷ Approvals	Snap-on type strain relief housing for - 2-pole sockets - 2-pole plugs

Color	Item no.	Pack.-unit	Color	Item no.	Pack.-unit	Color	Item no.	Pack.-unit
Sockets without strain relief housing			**Plugs without strain relief housing**			**Strain relief housings,** for cable diameter 3.8 - 8.2 mm / 0.15 - 0.32 in		
black	**890-202** ●	50	black	**890-212** ●	50	black	**890-502** ●	50
white	**890-222** ○	50	white	**890-232** ○	50	white	**890-512** ○	50
gray	**890-242** ●	50	gray	**890-252** ●	50			
blue	**890-1102** ●	50	blue	**890-1112** ●	50			
black	**890-111**	100 (2 x 50)	black	**890-111**	100 (2 x 50)			
white	**890-131**	100 (2 x 50)	white	**890-131**	100 (2 x 50)			
	890-392	1		**890-392**	1			

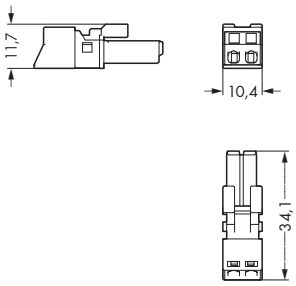

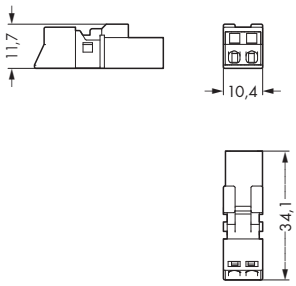

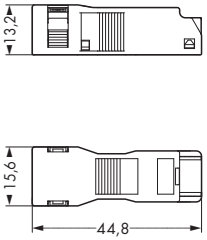

WINSTA® MINI

Snap-In Sockets and Plugs, 2 Poles

Cut-out dimensions	0.25 – 1.5 mm² ❶ 250 V/4 kV/3 16 A	AWG 22 - 16	0.25 – 1.5 mm² ❶ 250 V/4 kV/3 16 A	AWG 22 - 16
Sheet thickness: 0.5 mm to 2 mm (0.02 - 0.078 in) Tolerance of the cut-out: + 0.1 mm / 0.0039 in	9 mm / 0.35 in ❷ Approvals		9 mm / 0.35 in ❷ Approvals	

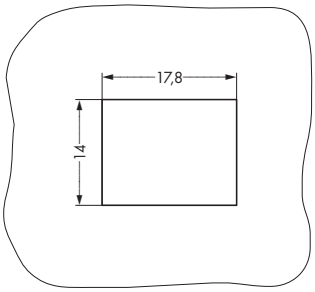

Description	Color	Item no.	Pack.-unit	Color	Item no.	Pack.-unit
Connectors, snap-in device connection, 2 poles, with CAGE CLAMP®S connection	**Sockets**			**Plugs**		
	black	**890-702** ●	50	black	**890-712** ●	50
	white	**890-722** ○	50	white	**890-732** ○	50
	gray	**890-742** ●	50	gray	**890-752** ●	50
	blue	**890-2102** ●	50	blue	**890-2112** ●	50
Accessories						
Lockout caps, for cut-out						
	black	**890-642**	100	black	**890-642**	100
	white	**890-692**	100	white	**890-692**	100
Mounting plates, for distribution connectors						
Fixing pin, for mounting plates, 5.1 x 1.5 - 2.5 mm / 0.2 x 0.059 - 0.098 in						
Operating tool, insulated, 2-way		**890-392**	1		**890-392**	1

Info

❶ Wire range: 0.25 - 1.5 mm² "s + f-st"
0.25 - 1 mm² "stranded"

❷ Approval data can be found in the online catalog at www.wagocatalog.com

●	black	Coding A	(L+ N–)
○	white	Coding A	(L+ N–)
●	gray	Coding B	(1 2)
●	blue	Coding I	(+ –)

Please find some information on the different codings on pages 146 and 147

Dimensions (in mm)

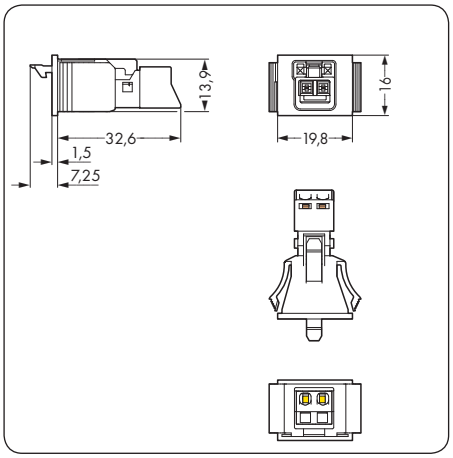

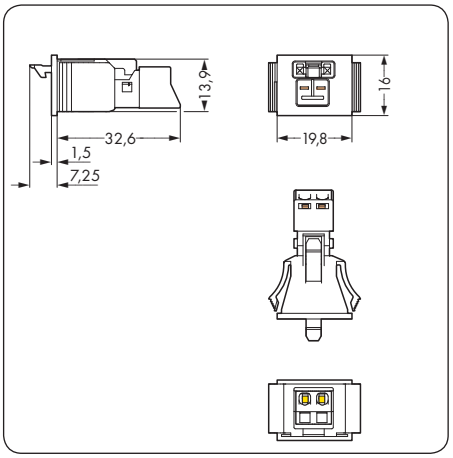

Distribution Connectors, 2 Poles

250 V/4 kV/3 16 A ❷ Approvals	250 V/4 kV/3 16 A ❷ Approvals

Color	Item no.	Pack.-unit	Color	Item no.	Pack.-unit
h-distribution connectors, unidirectional, plug / socket - socket			**T-distribution connectors 1 x plug / 2 x socket**		
black	**890-1634** ●	50	black	**890-1606** ●	25
white	**890-1684** ○	50	white	**890-1656** ○	25
			blue	**890-1617** ●	25
for "flying leads", with 3rd locking lever					
black	**890-1636** ●	50	for "flying leads", with 3rd locking lever		
white	**890-1686** ○	50	black	**890-1615** ●	25
			white	**890-1665** ○	25
			blue	**890-1620** ●	25
black	**890-1622**	100			
white	**890-1672**	100			
black	**890-601**	250			

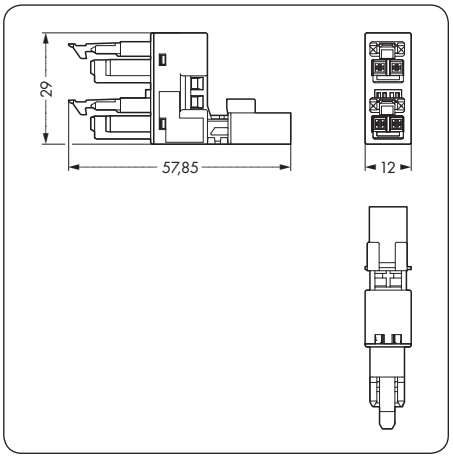

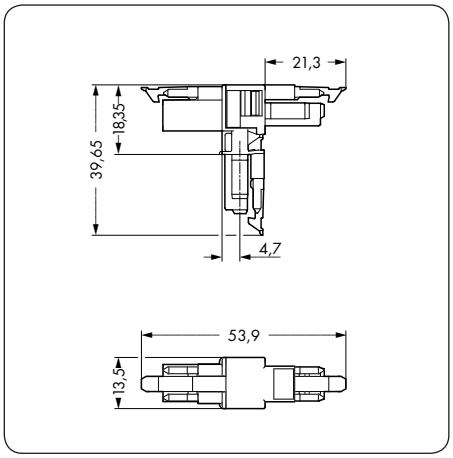

WINSTA® MINI Cable Assemblies 2 x 1 mm²

PVC H05VV-F 2x1
halogen-free H05Z1Z1-F 2x1

250 V/4 kV/3 10 A

Wire ends bonded 9 mm / 0.35 in
❶ Approvals

Interconnecting cables, socket - plug

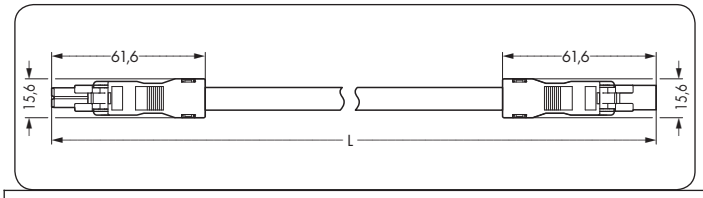

Length	Item no. black	Item no. white	Item no. black	Item no. white
Coding A ● ○				
	PVC		halogen-free	
1 m	891-8992/005-101	.../005-102	891-8992/015-101	.../015-102
2 m	891-8992/005-201	.../005-202	891-8992/015-201	.../015-202
3 m	891-8992/005-301	.../005-302	891-8992/015-301	.../015-302
4 m	891-8992/005-401	.../005-402	891-8992/015-401	.../015-402
5 m	891-8992/005-501	.../005-502	891-8992/015-501	.../015-502
6 m	891-8992/005-601	.../005-602	891-8992/015-601	.../015-602
7 m	891-8992/005-701	.../005-702	891-8992/015-701	.../015-702
8 m	891-8992/005-801	.../005-802	891-8992/015-801	.../015-802

Connecting cables, socket - free end

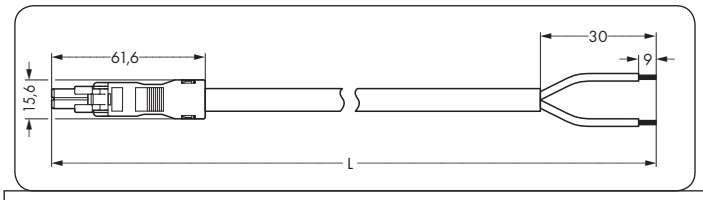

Length	Item no. black	Item no. white	Item no. black	Item no. white
Coding A ● ○				
	PVC		halogen-free	
1 m	891-8992/105-101	.../105-102	891-8992/115-101	.../115-102
2 m	891-8992/105-201	.../105-202	891-8992/115-201	.../115-202
3 m	891-8992/105-301	.../105-302	891-8992/115-301	.../115-302
4 m	891-8992/105-401	.../105-402	891-8992/115-401	.../115-402
5 m	891-8992/105-501	.../105-502	891-8992/115-501	.../115-502
6 m	891-8992/105-601	.../105-602	891-8992/115-601	.../115-602
7 m	891-8992/105-701	.../105-702	891-8992/115-701	.../115-702
8 m	891-8992/105-801	.../105-802	891-8992/115-801	.../115-802

Connecting cables, plug - free end

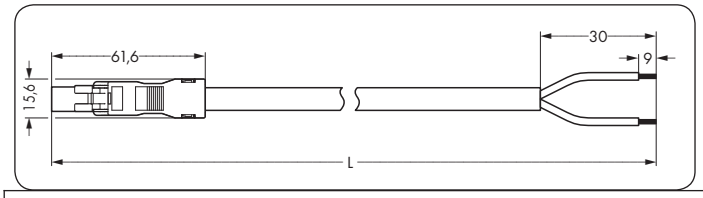

Length	Item no. black	Item no. white	Item no. black	Item no. white
Coding A ● ○				
	PVC		halogen-free	
1 m	891-8992/205-101	.../205-102	891-8992/215-101	.../215-102
2 m	891-8992/205-201	.../205-202	891-8992/215-201	.../215-202
3 m	891-8992/205-301	.../205-302	891-8992/215-301	.../215-302
4 m	891-8992/205-401	.../205-402	891-8992/215-401	.../215-402
5 m	891-8992/205-501	.../205-502	891-8992/215-501	.../215-502
6 m	891-8992/205-601	.../205-602	891-8992/215-601	.../215-602
7 m	891-8992/205-701	.../205-702	891-8992/215-701	.../215-702
8 m	891-8992/205-801	.../205-802	891-8992/215-801	.../215-802

Info

❶ Approval data can be found in the online catalog at www.wagocatalog.com

Other cables on request

● black Coding A (L+ N–)
○ white Coding A (L+ N–)

Please find some information on the different codings on pages 146 and 147

Accessories

Locking levers, tool operated,

for "flying leads"

black	**890-111**	100 (2 x 50)
white	**890-131**	100 (2 x 50)

Cable Assemblies 2 x 1.5 mm²/AWG 16

PVC H05VV-F 2x1.5
halogen-free H05Z1Z1-F 2x1.5

250 V/4 kV/3 16 A

Wire ends bonded 9 mm / 0.35 in
❶ Approvals

Interconnecting cables, socket - plug

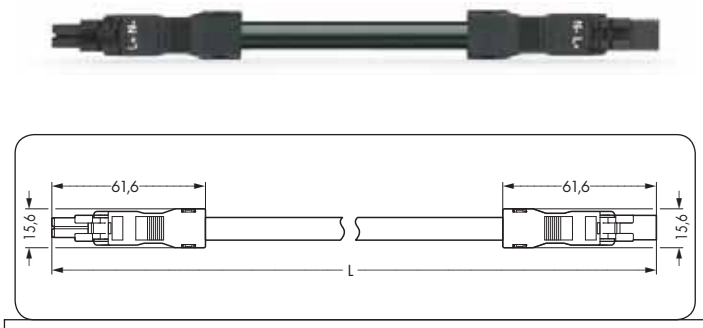

Length	Item no. black	Item no. white	Item no. black	Item no. white
Coding A ● ○				
	PVC		halogen-free	
1 m	891-8992/006-101	.../006-102	891-8992/016-101	.../016-102
2 m	891-8992/006-201	.../006-202	891-8992/016-201	.../016-202
3 m	891-8992/006-301	.../006-302	891-8992/016-301	.../016-302
4 m	891-8992/006-401	.../006-402	891-8992/016-401	.../016-402
5 m	891-8992/006-501	.../006-502	891-8992/016-501	.../016-502
6 m	891-8992/006-601	.../006-602	891-8992/016-601	.../016-602
7 m	891-8992/006-701	.../006-702	891-8992/016-701	.../016-702
8 m	891-8992/006-801	.../006-802	891-8992/016-801	.../016-802

Connecting cables, socket - free end

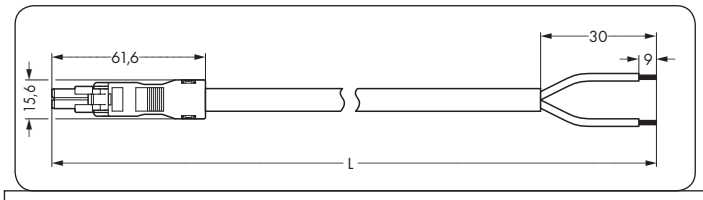

Length	Item no. black	Item no. white	Item no. black	Item no. white
Coding A ● ○				
	PVC		halogen-free	
1 m	891-8992/106-101	.../106-102	891-8992/116-101	.../116-102
2 m	891-8992/106-201	.../106-202	891-8992/116-201	.../116-202
3 m	891-8992/106-301	.../106-302	891-8992/116-301	.../116-302
4 m	891-8992/106-401	.../106-402	891-8992/116-401	.../116-402
5 m	891-8992/106-501	.../106-502	891-8992/116-501	.../116-502
6 m	891-8992/106-601	.../106-602	891-8992/116-601	.../116-602
7 m	891-8992/106-701	.../106-702	891-8992/116-701	.../116-702
8 m	891-8992/106-801	.../106-802	891-8992/116-801	.../116-802

Connecting cables, plug - free end

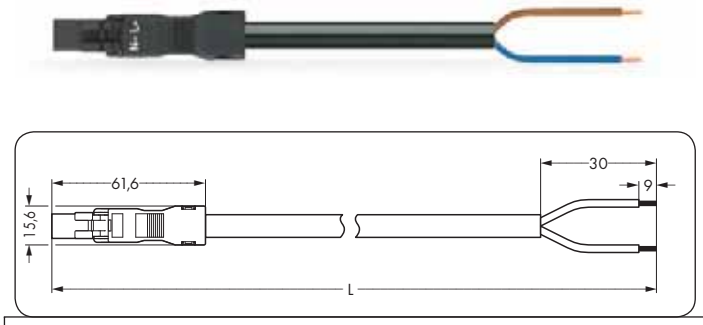

Length	Item no. black	Item no. white	Item no. black	Item no. white
Coding A ● ○				
	PVC		halogen-free	
1 m	891-8992/206-101	.../206-102	891-8992/216-101	.../216-102
2 m	891-8992/206-201	.../206-202	891-8992/216-201	.../216-202
3 m	891-8992/206-301	.../206-302	891-8992/216-301	.../216-302
4 m	891-8992/206-401	.../206-402	891-8992/216-401	.../216-402
5 m	891-8992/206-501	.../206-502	891-8992/216-501	.../216-502
6 m	891-8992/206-601	.../206-602	891-8992/216-601	.../216-602
7 m	891-8992/206-701	.../206-702	891-8992/216-701	.../216-702
8 m	891-8992/206-801	.../206-802	891-8992/216-801	.../216-802

Lengths	Pack.-unit
1 m	50
2, 3, 4 m	25
5, 6 m	15
7, 8 m	10

Other lengths on request

Accessories

Locking levers, tool operated,
for "flying leads"

black	**890-111**	100 (2 x 50)
white	**890-131**	100 (2 x 50)

WINSTA® MINI

Sockets and Plugs, 3 Poles

	0.25 – 1.5 mm² ❶ 250 V/4 kV/3 16 A	AWG 22 - 16	0.25 – 1.5 mm² ❶ 250 V/4 kV/3 16 A	AWG 22 - 16
	9 mm / 0.35 in		9 mm / 0.35 in	
	❷ Approvals		❷ Approvals	

Description	Color	Item no.	Pack.-unit	Color	Item no.	Pack.-unit
Connectors, 3 poles, with CAGE CLAMP®S connection	**Sockets with strain relief housing,** for cable diameter 4.5 - 10 mm (0.17 - 0.39 in)			**Plugs with strain relief housing,** for cable diameter 4.5 - 10 mm (0.17 - 0.39 in)		
	black	**890-103** ●	50	black	**890-113** ●	50
	white	**890-123** ○	50	white	**890-133** ○	50
Accessories						
Locking levers, tool operated, for "flying leads"						
	black	**890-111**	100 (2 x 50)	black	**890-111**	100 (2 x 50)
	white	**890-131**	100 (2 x 50)	white	**890-131**	100 (2 x 50)
Shield connecting plate, for plugs and sockets, see page 19						
		890-523	50		**890-523**	50
Operating tool, insulated, 3-way						
		890-393	1		**890-393**	1

Info

❶ Wire range: 0.25 - 1.5 mm² "s + f-st"
0.25 - 1 mm² "stranded"

❷ Approval data can be found in the online catalog at www.wagocatalog.com

● black	Coding A	(L ⏚ N)
○ white	Coding A	(L ⏚ N)
◐ gray	Coding B	(1 2 3)

Please find some information on the different codings on pages 146 and 147

Dimensions (in mm)

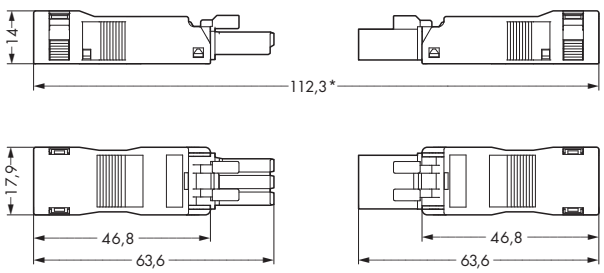

* Overall length of the connectors in mated condition

0.25 – 1.5 mm² ❶ 250 V/4 kV/3 16 A | AWG 22 - 16 9 mm / 0.35 in ❷ Approvals	0.25 – 1.5 mm² ❶ 250 V/4 kV/3 16 A | AWG 22 - 16 9 mm / 0.35 in ❷ Approvals	Snap-on type strain relief housing for - 3-pole sockets - 3-pole plugs

Color	Item no.	Pack.-unit	Color	Item no.	Pack.-unit	Color	Item no.	Pack.-unit
Sockets without strain relief housing			**Plugs without strain relief housing**			**Strain relief housings,** for cable diameter 4.5 - 10 mm (0.17 - 0.39 in)		
black	**890-203** ●	50	black	**890-213** ●	50	black	**890-503** ●	50
white	**890-223** ○	50	white	**890-233** ○	50	white	**890-513** ○	50
gray	**890-243** ◐	50	gray	**890-253** ◐	50			
black	**890-111**	100 (2 x 50)	black	**890-111**	100 (2 x 50)			
white	**890-131**	100 (2 x 50)	white	**890-131**	100 (2 x 50)			
							890-523	50
	890-393	1		**890-393**	1			

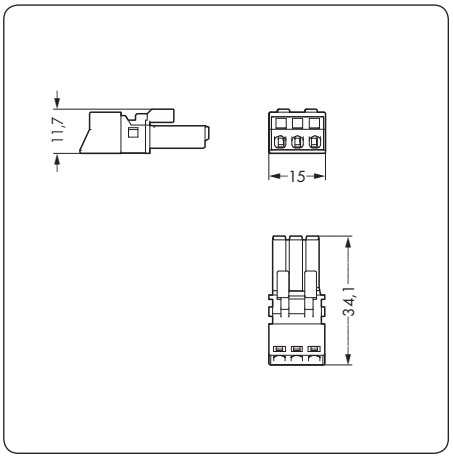

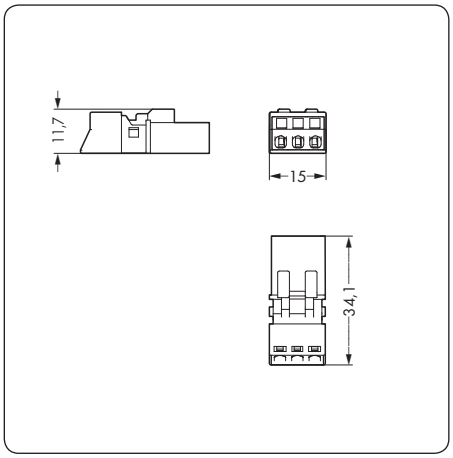

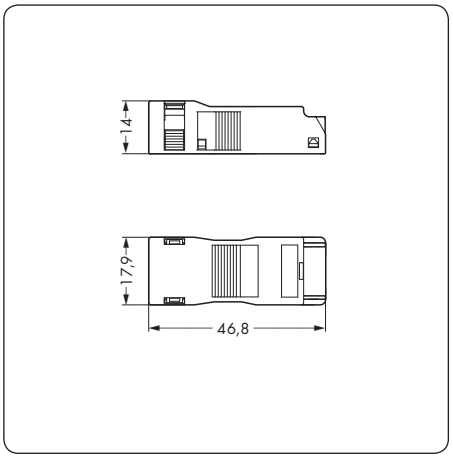

WINSTA® MINI

Snap-In Sockets and Plugs, 3 Poles

Cut-out dimensions	0.25 – 1.5 mm² ❶ 250 V/4 kV/3 16 A	AWG 22 - 16	0.25 – 1.5 mm² ❶ 250 V/4 kV/3 16 A	AWG 22 - 16
Sheet thickness: 0.5 mm to 2 mm (0.02 - 0.078 in) Tolerance of the cut-out: + 0.1 mm / 0.0039 in	9 mm / 0.35 in ❷ Approvals		9 mm / 0.35 in ❷ Approvals	

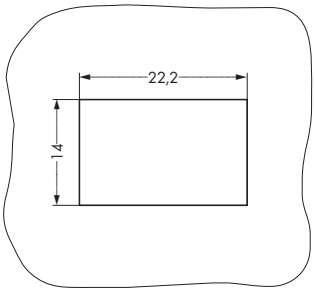

Description	Color	Item no.		Pack.-unit	Color	Item no.		Pack.-unit
Connectors, snap-in device connection, 3 poles, with CAGE CLAMP®S connection	**Sockets**				**Plugs**			
	black	**890-703**	●	50	black	**890-713**	●	50
	white	**890-723**	○	50	white	**890-733**	○	50
	gray	**890-743**	◐	50	gray	**890-753**	◐	50

Accessories

Lockout caps, for cut-out								
	black	**890-643**		100	black	**890-643**		100
	white	**890-693**		100	white	**890-693**		100
Mounting plate, for distribution connectors								
Fixing pin, for mounting plates								
Operating tool, insulated, 3-way								
		890-393		1		**890-393**		1

Info	Dimensions (in mm)

❶ Wire range: 0.25 - 1.5 mm² "s + f-st"
0.25 - 1 mm² "stranded"

❷ Approval data can be found in the online catalog at www.wagocatalog.com

● black	Coding A	(L ⏚ N)
○ white	Coding A	(L ⏚ N)
◐ gray	Coding B	(1 2 3)

Please find some information on the different codings on pages 146 and 147

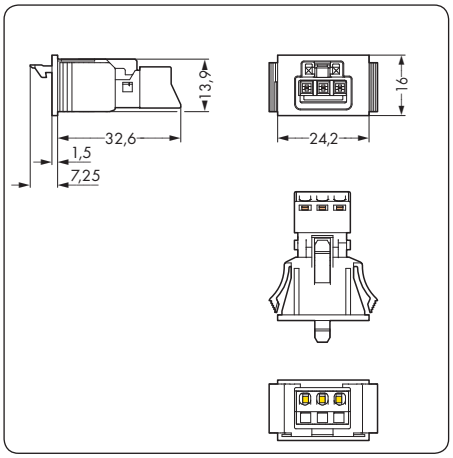

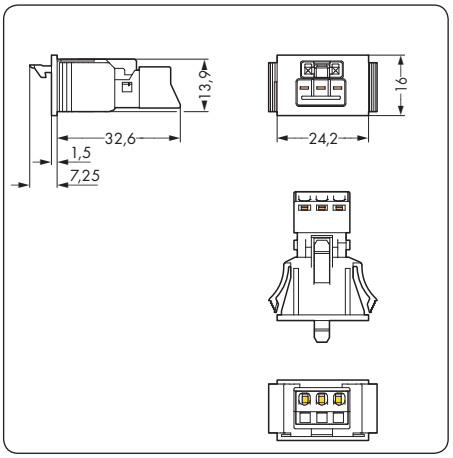

Distribution Connectors, 3 Poles

250 V/4 kV/3 16 A ❷ Approvals	250 V/4 kV/3 16 A ❷ Approvals

Color	Item no.		Pack.-unit	Color	Item no.		Pack.-unit
h-distribution connectors, unidirectional, plug / socket - socket				**T-distribution connectors, 1 x plug / 2 x socket**			
black	**890-634**	●	50	black	**890-606**	●	25
white	**890-684**	○	50	white	**890-656**	○	25
for "flying leads", with 3rd locking lever				for "flying leads", with 3rd locking lever			
black	**890-636**	●	50	black	**890-615**	●	25
white	**890-686**	○	50	white	**890-665**	○	25
black	**890-623**		100				
white	**890-673**		100				
black	**890-601**		250				

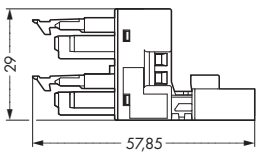

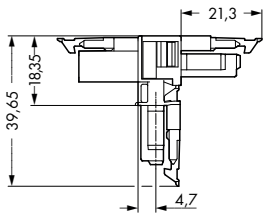

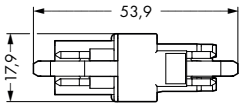

Connector with shield termination

Apply the shield to the rubber cable.
Strip length, outer insulation = 30 mm / 1.18 in
Shield length = 8 mm / 0.31 in

Push the shield connecting plate into the connector until fully inserted

First insert the wired connector into the strain relief housing, then snap the clamp and cover.

WINSTA® MINI Cable Assemblies 3 x 1 mm²

PVC H05VV-F 3G1
halogen-free H05Z1Z1-F 3G1

250 V/4 kV/3 10 A

Wire ends bonded 9 mm

❶ Approvals

Interconnecting cables, socket - plug

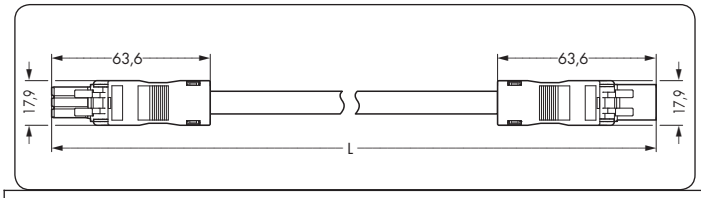

Length	Item no. black	Item no. white	Item no. black	Item no. white
Coding A ● ○				
	PVC		halogen-free	
1 m	891-8993/005-101	.../005-102	891-8993/015-101	.../015-102
2 m	891-8993/005-201	.../005-202	891-8993/015-201	.../015-202
3 m	891-8993/005-301	.../005-302	891-8993/015-301	.../015-302
4 m	891-8993/005-401	.../005-402	891-8993/015-401	.../015-402
5 m	891-8993/005-501	.../005-502	891-8993/015-501	.../015-502
6 m	891-8993/005-601	.../005-602	891-8993/015-601	.../015-602
7 m	891-8993/005-701	.../005-702	891-8993/015-701	.../015-702
8 m	891-8993/005-801	.../005-802	891-8993/015-801	.../015-802

Connecting cables, socket - free end

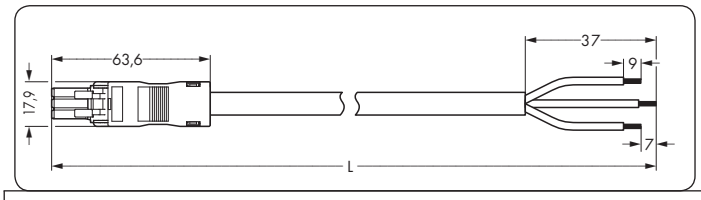

Length	Item no. black	Item no. white	Item no. black	Item no. white
Coding A ● ○				
	PVC		halogen-free	
1 m	891-8993/105-101	.../105-102	891-8993/115-101	.../115-102
2 m	891-8993/105-201	.../105-202	891-8993/115-201	.../115-202
3 m	891-8993/105-301	.../105-302	891-8993/115-301	.../115-302
4 m	891-8993/105-401	.../105-402	891-8993/115-401	.../115-402
5 m	891-8993/105-501	.../105-502	891-8993/115-501	.../115-502
6 m	891-8993/105-601	.../105-602	891-8993/115-601	.../115-602
7 m	891-8993/105-701	.../105-702	891-8993/115-701	.../115-702
8 m	891-8993/105-801	.../105-802	891-8993/115-801	.../115-802

Connecting cables, plug - free end

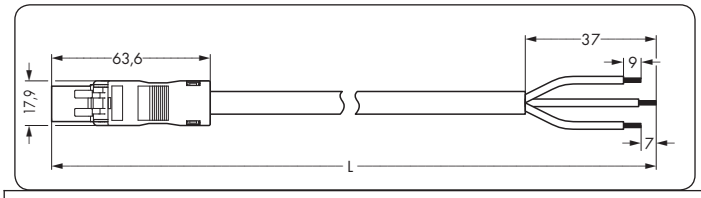

Length	Item no. black	Item no. white	Item no. black	Item no. white
Coding A ● ○				
	PVC		halogen-free	
1 m	891-8993/205-101	.../205-102	891-8993/215-101	.../215-102
2 m	891-8993/205-201	.../205-202	891-8993/215-201	.../215-202
3 m	891-8993/205-301	.../205-302	891-8993/215-301	.../215-302
4 m	891-8993/205-401	.../205-402	891-8993/215-401	.../215-402
5 m	891-8993/205-501	.../205-502	891-8993/215-501	.../215-502
6 m	891-8993/205-601	.../205-602	891-8993/215-601	.../215-602
7 m	891-8993/205-701	.../205-702	891-8993/215-701	.../215-702
8 m	891-8993/205-801	.../205-802	891-8993/215-801	.../215-802

Info

❶ Approval data can be found in the online catalog at www.wagocatalog.com

Other cables on request

● black Coding A (L ⏚ N)
○ white Coding A (L ⏚ N)

Please find some information on the different codings on pages 146 and 147

Accessories

Locking levers, tool operated,

for "flying leads"		
black	**890-111**	100 (2 x 50)
white	**890-131**	100 (2 x 50)

Lengths	Pack.-unit
1 m	50
2, 3, 4 m	25
5, 6 m	15
7, 8 m	10

Other lengths on request

WINSTA

WINSTA® MIDI

770/771 Series up to 4 mm² / 25 A

2

770 Series
Connectors, 3 Poles 24 – 25
Connectors, 3 Poles, Special Items 30 – 31
Connectors, 4 Poles 44 – 45
Connectors, 5 Poles 56 – 59

770 Series
Strain Relief Housings, 3 Poles 26 – 27
Strain Relief Housings, 4 Poles 46
Strain Relief Housings, 5 Poles 60 – 61
Strain Relief Housings, 6 Poles 80
Strain Relief Housings, 7 Poles 81

770 Series
Snap-In Device Connectors, 3 Poles 28 – 29
Snap-In Device Connectors, 4 Poles 48 – 49
Snap-In Device Connectors, 5 Poles 62 – 63

770 Series
PCB Connectors, 3 Poles 32 – 33
PCB Connectors, 4 Poles 50 – 51
PCB Connectors, 5 Poles 64 – 65

770 Series
Intermediate Couplers and T-Distribution Connectors, 3 Poles 34 – 37
Distribution Connectors, 4 Poles 52
Intermediate Couplers and T-Distribution Connectors, 5 Poles 66 – 70
Distribution Box 78 – 79

771 Series
Cable Assemblies, 3 Poles 38 – 43
Cable Assemblies, 4 Poles 54
Cable Assemblies, 5 Poles 72 – 77

Handling *WINSTA®* MIDI 770 Series

Preparation

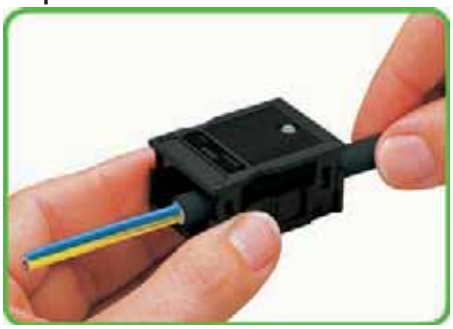

We recommend to pull the pre-latched strain relief housing over the conductor prior to conductor connection. However, the strain relief can be mounted at a later time as well.

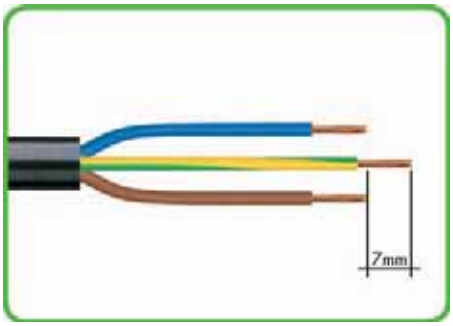

1. Strip length, outer insulation = 55 mm / 2.16 in
2. Strip length = 9 mm / 0.35 in
3. PE conductor protruding = 7 mm / 0.27 in

Wire connection with CAGE CLAMP®S

Open clamping point with screwdriver (blade width 2.5mm/0.098 in) and insert stripped conductor up to the stop.

Conductor connection with CAGE CLAMP® S

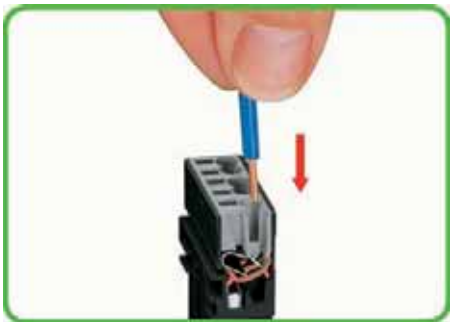

Push solid stripped conductor up to the stop.

Actuate the clamp using a screwdriver (blade width 2.5mm/0.098 in) to connect flexible conductors and insert the stripped conductor up to the stop.

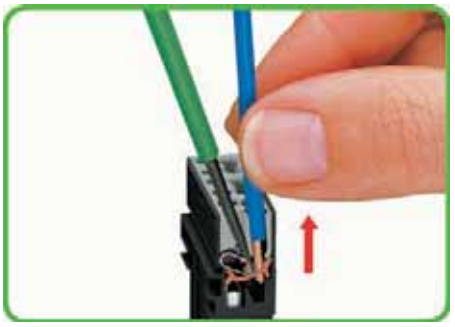

In order to disconnect the conductor, actuate the clamp using a screwdriver (blade width 2.5 mm/ 0.098 in) and pull off the conductor.

Strain relief assembly

Latch the strain relief housing on the plug/socket. Note the inscription "TOP".

Prepare strain relief housing by snapping together upper and bottom part.

Tighten the strain relief screw using a screwdriver

Variable coding

Simply break or cut off the coding pin on the socket.

Fit the coding pin into the connector (break first) so that the pin engages.

Marking

Marking of strain relief housing with WSB quick marking sytem.

WINSTA® MIDI

Sockets and Plugs, 3 poles

	2 x 0.5 – 4 mm² ❶ 250 V/4 kV/3 25 A	2 x AWG 20 - 12	2 x 0.5 – 4 mm² ❶ 250 V/4 kV/3 25 A	2 x AWG 20 - 12
	9 mm / 0.35 in		9 mm / 0.35 in	
	❷ Approvals		❷ Approvals	

Description	Color	Item no.	Pack.-unit	Color	Item no.	Pack.-unit
Connectors, 3 poles,	**Sockets with strain relief housing,**			**Plugs with strain relief housing,**		
with CAGE CLAMP®S connection	for 2 cables, diameter 8 - 11.5 mm / 0.31 - 0.45 in ❸			for 2 cables, diameter 8 - 11.5 mm / 0.31 - 0.45 in ❸		
	black	**770-103** ●	25	black	**770-113** ●	25
	white	**770-123** ○	25	white	**770-133** ○	25
Accessories						
Locking levers, manually operated, for "flying leads"						
	black	**770-101**	100 (4 x 25)	black	**770-101**	100 (4 x 25)
	white	**770-121**	100 (4 x 25)	white	**770-121**	100 (4 x 25)
Locking levers, tool operated, for "flying leads"						
	black	**770-111**	100 (4 x 25)	black	**770-111**	100 (4 x 25)
	white	**770-131**	100 (4 x 25)	white	**770-131**	100 (4 x 25)
Lockout caps, for socket, separable, 12 poles	black	**770-201**	100			
	white	**770-221**	100			
Coding pin, for plug						
				gray	**770-401**	100

Info

❶ Wire range: 0.5 - 4 mm² "s + f-st"
0.5 - 2.5 mm² "stranded"

❷ Approval data can be found in the online catalog at www.wagocatalog.com

❸ More strain relief housings
see pages 26 and 27

● black	Coding A	(L ⏚ N)
○ white	Coding A	(L ⏚ N)
● gray	Coding B	(1 2 3)
● red	Coding P	(L ⏚ N)
● orange	Coding R	(LON LON S)
● brown	Coding S	(1 2 L)

Please find some information on the different codings on pages 146 and 147

Dimensions (in mm)

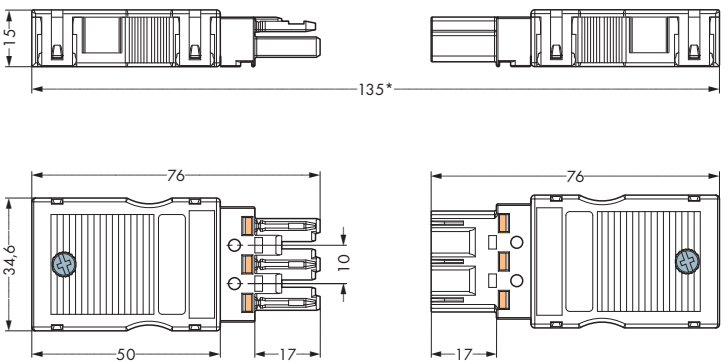

* Overall length of the connectors in mated condition

2 x 0.5 – 4 mm² ❶ 250 V/4 kV/3 25 A | 2 x AWG 20 - 12 9 mm / 0.35 in ❷ Approvals	2 x 0.5 – 4 mm² ❶ 250 V/4 kV/3 25 A | 2 x AWG 20 - 12 9 mm / 0.35 in ❷ Approvals

NOTE:
All products for fixed installations (snap-in versions, distribution connectors) are equipped with locking levers ex-factory, so that the plugs or sockets are always locked. Additional locking levers are only required for "flying leads" (plug/socket).

Color	Item no.	Pack.-unit	Color	Item no.	Pack.-unit
Sockets without strain relief housing			**Plugs without strain relief housing**		
black	**770-203**	100	black	**770-213**	100
white	**770-223**	100	white	**770-233**	100
gray	**770-243**	100	gray	**770-253**	100
red	**770-1303**	100	red	**770-1313**	100
orange	**770-1343**	100	orange	**770-1353**	100
brown	**770-1363**	100	brown	**770-1373**	100
black	**770-101**	100 (4 x 25)	black	**770-101**	100 (4 x 25)
white	**770-121**	100 (4 x 25)	white	**770-121**	100 (4 x 25)
black	**770-111**	100 (4 x 25)	black	**770-111**	100 (4 x 25)
white	**770-131**	100 (4 x 25)	white	**770-131**	100 (4 x 25)
black	**770-201**	100			
white	**770-221**	100			
			gray	**770-401**	100

Snap on locking lever. Observe direction!

Locking lever, manually operated:
1.) Press on locking lever.
2.) Pull apart the connectors.

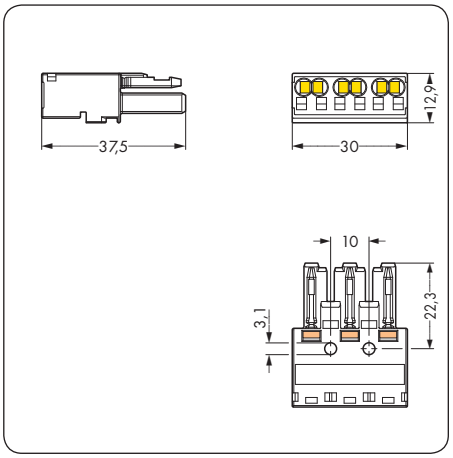

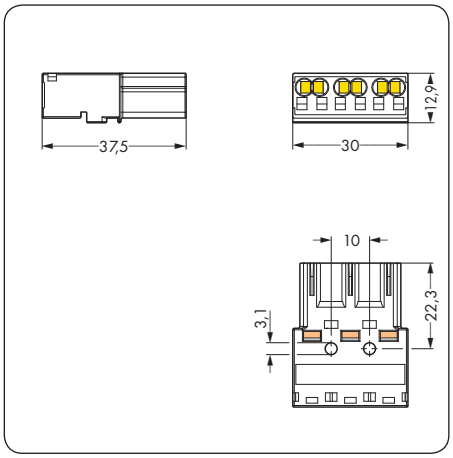

Locking lever, tool operated:
1.) Unlatch locking lever.
2.) Pull apart the connectors.

WINSTA® MIDI

Strain Relief Housings, 3 Poles, for Different Cable Diameters

	Snap-on type strain relief housing for - 3-pole sockets - 3-pole plugs ❶ Approvals	Snap-on type strain relief housing for - 3-pole sockets - 3-pole plugs ❶ Approvals

Description	Color	Item no.	Pack.-unit	Color	Item no.	Pack.-unit
Strain relief housings,	**Strain relief housings,**			**Strain relief housings,**		
3 poles	for 2 cables, diameter 4.5 - 8 mm / 0.17 - 0.31 in ❷			for 2 cables, diameter 8 - 11.5 mm / 0.31 - 0.45 in ❷		
	black	**770-503/023-000**	50	black	**770-503**	50
	white	**770-513/023-000**	50	white	**770-513**	50
Accessories						
Marker strips,						
self-adhesive, on DIN A 1 card, strip length 182 mm / 7.16 in	Height 6 mm / 0.23 in Size of the marker field 28 x 6.5 mm / 1.1 x 0.25 in	**210-333**	100	Height 6 mm / 0.23 in Size of the marker field 28 x 6.5 mm / 1.1 x 0.25 in	**210-333**	100
Shield connecting plate,						
for plugs and sockets, for 2 cables, diameter 4 - 7.5 mm / 0.157 - 0.29 in		**770-523**	25			

Info	Dimensions (in mm)

❶ Approval data can be found in the online catalog at www.wagocatalog.com
❷ For H05VV and NYM cables
Other cables on request

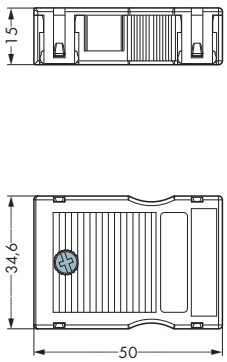

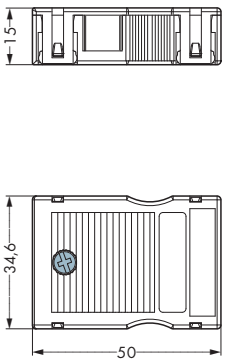

Snap-on type strain relief housing for - 3-pole sockets - 3-pole plugs ❶ Approvals	Snap-on type strain relief housing for - 3-pole sockets - 3-pole plugs ❶ Approvals

Color	Item no.	Pack.-unit	Color	Item no.	Pack.-unit
Strain relief housings, angled			**Strain relief housings, for 4 mm²/AWG 12 cables,**		
for 2 cables, diameter 8 - 11.5 mm / 0.31 - 0.45 in ❷			for 1 cable, diameter 9 - 13 mm / 0.35 - 0.51 in ❷		
black	**770-503/032-000**	25	black	**770-503/021-000**	50
white	**770-513/032-000**	25	white	**770-513/021-000**	50
Height 6 mm / 0.23 in	**210-333**	100	Height 6 mm / 0.23 in	**210-333**	100
Size of the marker field 28 x 6.5 mm / 1.1 x 0.25 in			Size of the marker field 28 x 6.5 mm / 1.1 x 0.25 in		

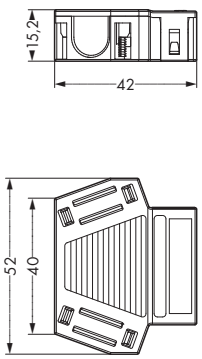

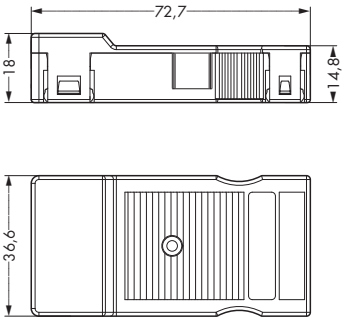

Connector with shield termination

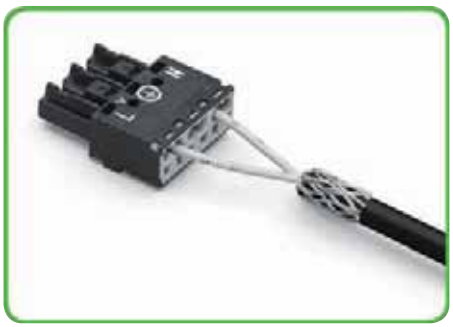

Apply the shield to the rubber cable.
Strip length, outer insulation = 55 mm / 2.16 in
Shield length = 10 mm / 0.39 in

Push the shield connecting plate into the connector until fully inserted.

First insert the wired connector into the strain relief housing, then snap the cover and tighten the screw.

WINSTA® MIDI

Snap-In Sockets and Plugs, 3 Poles

	2 x 0.5 – 4 mm² ❶ 250 V/4 kV/3 25 A	2 x AWG 20 - 12	2 x 0.5 – 4 mm² ❶ 250 V/4 kV/3 25 A	2 x AWG 20 - 12
	9 mm / 0.35 in		9 mm / 0.35 in	
	❷ Approvals		❷ Approvals	

Description	Color	Item no.	Pack.-unit	Color	Item no.	Pack.-unit
Connectors, snap-in device connection, 3 poles, with CAGE CLAMP®S connection	**Sockets**			**Sockets with protruding coding system**		
	black	**770-703** ●	100	black	**770-703/009-000** ●	100
	white	**770-723** ○	100	white	**770-723/009-000** ○	100
	gray	**770-743**	100			
	red	**770-2303**	100			
	orange	**770-2343**	100			
	brown	**770-2363**	100			
Accessories						
Lockout caps, for cut-out						
	black	**770-643**	100	black	**770-643**	100
	white	**770-693**	100	white	**770-693**	100
Lockout caps, for socket, separable, 12 poles						
	black	**770-201**	100	black	**770-201**	100
	white	**770-221**	100	white	**770-221**	100
Coding pin, for plug						

Info

❶ Wire range: 0.5 - 4 mm² "s + f-st"
0.5 - 2.5 mm² "stranded"

❷ Approval data can be found in the online catalog at www.wagocatalog.com

● black	Coding A	(L ⏚ N)
○ white	Coding A	(L ⏚ N)
● gray	Coding B	(1 2 3)
● red	Coding P	(L ⏚ N)
● orange	Coding R	(LON LON S)
● brown	Coding S	(1 2 L)

Please find some information on the different codings on pages 146 and 147

Dimensions (in mm)

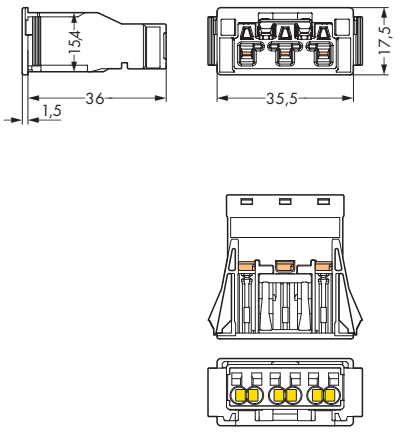

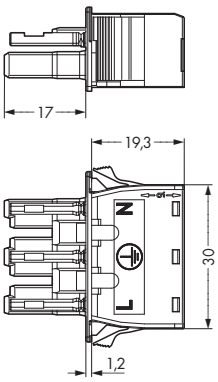

2 x 0.5 – 4 mm² ❶ 250 V/4 kV/3 25 A | 2 x AWG 20 - 12 9 mm / 0.35 in ❷ Approvals	2 x 0.5 – 4 mm² ❶ 250 V/4 kV/3 25 A | 2 x AWG 20 - 12 9 mm / 0.35 in ❷ Approvals

Color	Item no.	Pack.-unit	Color	Item no.	Pack.-unit
Plugs			**Plugs with direct contacting of the ground conductor**		
black	**770-713** ●	100	black	**770-713/007-000** ●	100
white	**770-733** ○	100	white	**770-733/007-000** ○	100
gray	**770-753** ●	100	red	**770-2313/007-000** ●	100
red	**770-2313** ●	100			
orange	**770-2353** ●	100			
black	**770-643**	100	black	**770-643**	100
white	**770-693**	100	white	**770-693**	100
gray	**770-401**	100	gray	**770-401**	100

Direct contacting of the ground conductor

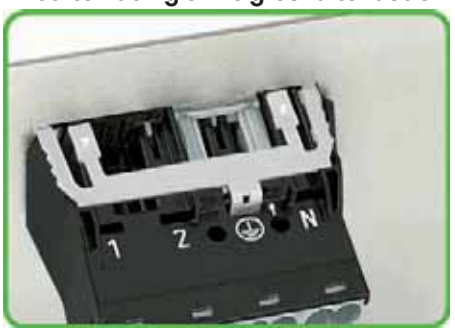

Varnish-piercing direct contacting of the ground conductor.
(Example shows 4-pole connector)

Lockout cap

Seal unused cutout with lockout cap.

Dimensions (in mm) cutout

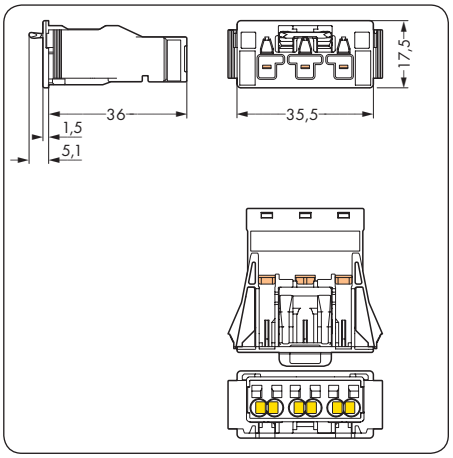

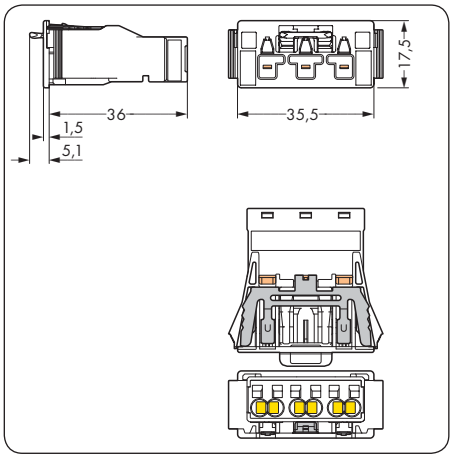

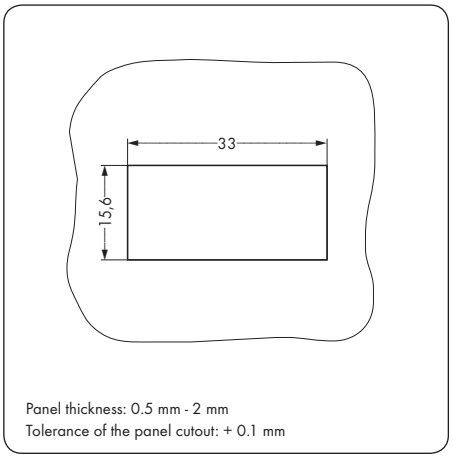

WINSTA® MIDI

Shorting Plugs, 3 Poles
Plugs with Ground Contact, 3 to 5 Poles

	250 V/4 kV/3 20 A **NOTE:** Before finally connecting the switches, the shorting plugs may be used to switch on or off.	2 x 0.5 – 4 mm² 250 V/4 kV/3 25 A 9 mm / 0.35 in ❶ Approvals	2 x AWG 20 - 12

Description	Marking	Item no.	Pack.-unit	Color	Item no.	Pack.-unit
Shorting plugs,	**Shorting plugs,**			**Plugs, with ground contact,**		
device connectors	brown plugs with assembled strain relief housing			3- / 4- / 5-pole, **without** strain relief housing;		
				e.g., for assembly on luminaire casings		
				black	**770-213/002-000** ●	25
				white	**770-233/002-000** ○	25
		770-1373/146-000 ●	50			
		770-1373/147-000 ●	50			
		770-1373/148-000 ●	50	Delivery time and other colors on request.		
		770-1373/149-000 ●	50			
Accessories						
Locking levers, manually operated,						
for "flying leads"						
	black	**770-101**	100 (4 x 25)	black	**770-101**	100 (4 x 25)
	white	**770-121**	100 (4 x 25)	white	**770-121**	100 (4 x 25)
Locking levers, tool operated,						
for "flying leads"						
	black	**770-111**	100 (4 x 25)	black	**770-111**	100 (4 x 25)
	white	**770-131**	100 (4 x 25)	white	**770-131**	100 (4 x 25)
Lockout caps, for socket,						
separable,						
12 poles						

Info	Dimensions (in mm)	Use

❶ Approval data can be found in the online catalog at www.wagocatalog.com

❷ Internal connection via 0.8 mm /0.031 in thick current bars is possible. Other thicknesses on request

● black	Coding A	(L ⏚ N)
○ white	Coding A	(L ⏚ N)
● brown	Coding S	

Please find some information on the different codings on pages 146 and 147

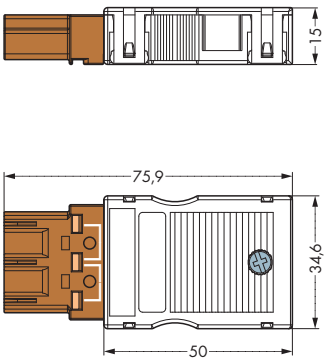

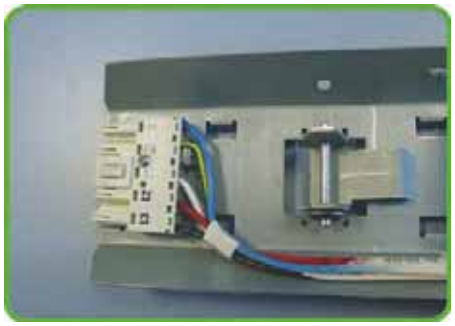

Plug with ground contact mounted on luminaire (example shows 5-pole plug).

Device Connectors, 3 Poles

250 V/4 kV/3 25 A ❶ Approvals	250 V/4 kV/3 25 A ❶ Approvals

Color	Item no.	Pack.-unit	Color	Item no.	Pack.-unit
Socket modules ❷			**Plug modules with locking lever ❷**		
black	**770-408** ●	100	black	**770-418** ●	100
white	**770-428** ○	100	white	**770-438** ○	100
black	**770-101**	100 (4 x 25)			
white	**770-121**	100 (4 x 25)			
black	**770-111**	100 (4 x 25)			
white	**770-131**	100 (4 x 25)			
black	**770-201**	100			
white	**770-221**	100			

Device connectors are designed for the cost-effective mounting in corresponding guide slots in an enclosure. The internal electrical connection is performed by contacting the 0.8 mm/0.031 in thick current bars. ❷

Dimensions (in mm)

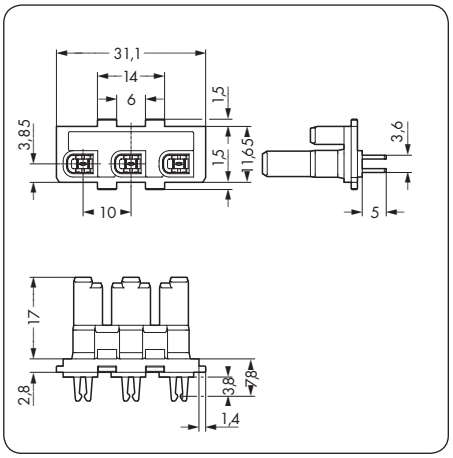

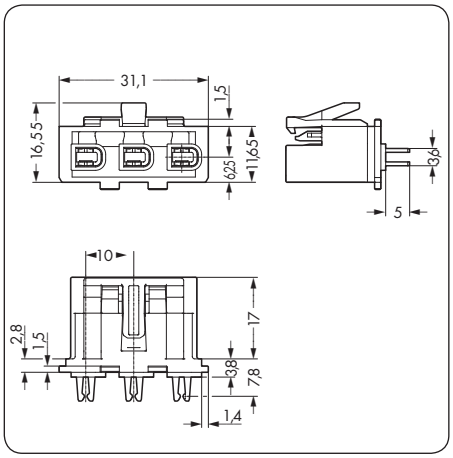

WINSTA® MIDI

PCB Connectors, 3 Poles

	250 V/4 kV/3 25 A ❶ ❷ Approvals	250 V/4 kV/3 25 A ❶ ❷ Approvals

Description	Color	Item no.		Pack.-unit	Color	Item no.		Pack.-unit
PCB connectors,	**Sockets,** straight type				**Plugs,** straight type			
2 solder pins per pole								
	black	**770-803**	●	100	black	**770-813**	●	100
	white	**770-823**	○	100	white	**770-833**	○	100
	gray	**770-843**	◐	100	gray	**770-853**	◐	100
Accessories								
Lockout caps, for socket, separable, 12 poles	black	**770-201**		100				
	white	**770-221**		100				
Coding pin, for plug								
					gray	**770-401**		100

Info	Dimensions (in mm)

❶ Current load see table on page 33

❷ Approval data can be found in the online catalog at www.wagocatalog.com

● black	Coding A	(L ⏚ N)
○ white	Coding A	(L ⏚ N)
◐ gray	Coding B	(1 2 3)

Please find some information on the different codings on pages 146 and 147

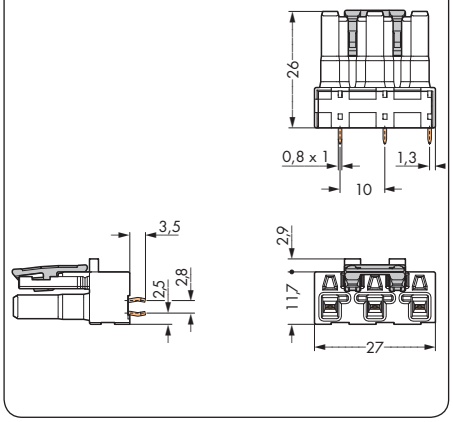

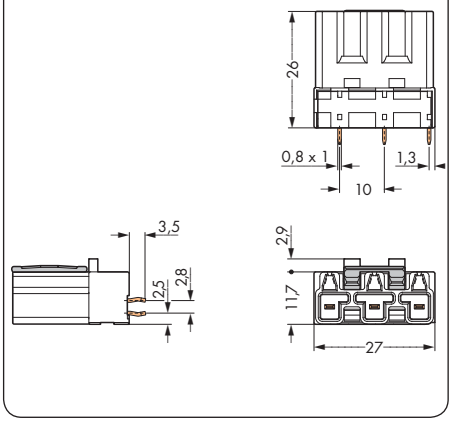

250 V/4 kV/3 **25 A ❶** **❷ Approvals**	**250 V/4 kV/3** **25 A ❶** **❷ Approvals**

Color	Item no.	Pack.-unit	Color	Item no.	Pack.-unit
Sockets, angled type			**Plugs,** angled type		
black	**770-803/011-000** ●	100	black	**770-813/011-000** ●	100
white	**770-823/011-000** ○	100	white	**770-833/011-000** ○	100
gray	**770-843/011-000** ●	100	gray	**770-853/011-000** ●	100
black	**770-201**	100			
white	**770-221**	100			
			gray	**770-401**	100

❶ **Depends on the PCB track dimensions**

Nominal current	Thickness of PCB track	Width of PCB track	Conductor cross section
16 A	70 µm one side	7 mm / 0.27 in	≙1.5 mm²/ AWG 16
20 A	70 µm one side	7 mm	≙2.5 mm²/ AWG 14
25 A	105 µm both sides	7 mm	≙4 mm²/ AWG 12

Hole patterns

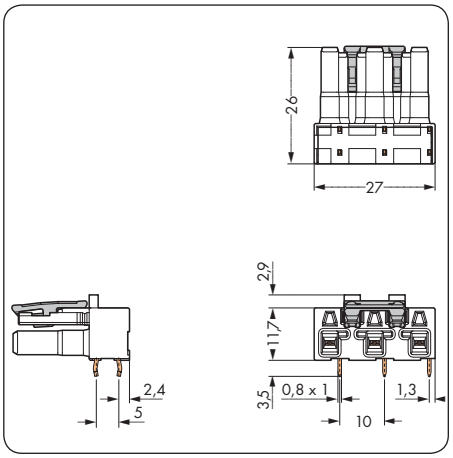

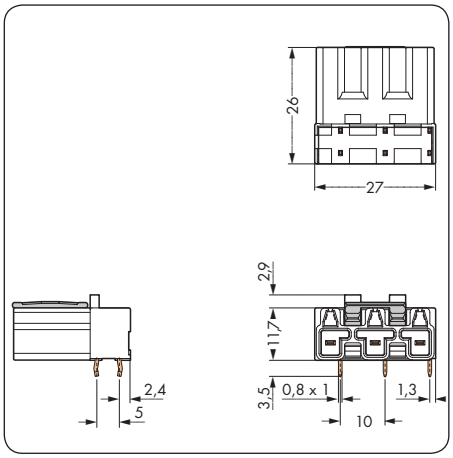

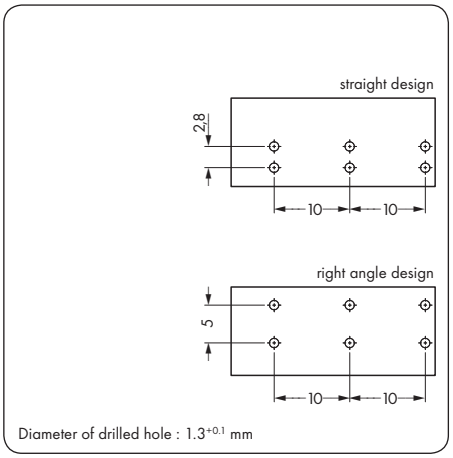

WINSTA® MIDI

Intermediate Couplers and T-Distribution Connectors, 3 Poles

	250 V/4 kV/3 25 A ❶ Approvals	250 V/4 kV/3 25 A ❶ Approvals

Description	Color	Item no.	Pack.-unit	Color	Item no.	Pack.-unit
Intermediate couplers, distribution connectors	**Intermediate couplers, 1 x plug / 1 x socket**			**T-distribution connectors, 1 x plug / 2 x socket**		
				black	**770-606** ●	50
				white	**770-656** ○	50
	black	**770-603** ●	100	gray	**770-967** ●	50
	white	**770-653** ○	100	orange	**770-667** ●	50
				for "flying leads", with 3rd locking lever		
				black	**770-615** ●	50
				white	**770-665** ○	50
				gray	**770-970** ●	50
				orange	**770-670** ●	50
Accessories						
Mounting plates, for snapping on distribution connectors, handling see page 35						
Fixing pin, for mounting plates, 6.1 x 2.5 - 4 mm / 0.24 x 0.098 - 0.157 in						
Lockout caps, for socket, separable, 12 poles				black	**770-201**	100
				white	**770-221**	100

Info	Dimensions (in mm)

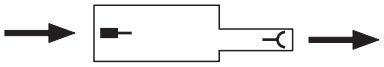

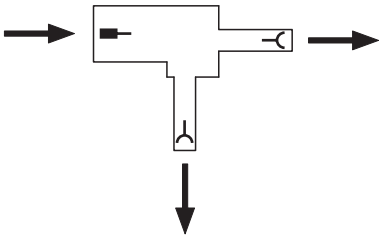

❶ Approval data can be found in the online catalog at www.wagocatalog.com

● black	Coding A	(L ⏚ N)
○ white	Coding A	(L ⏚ N)
● gray	Coding B	(1 2 3)
● red	Coding P	(L ⏚ N)
● orange	Coding R	(LON LON S)

Please find some information on the different codings on pages 146 and 147

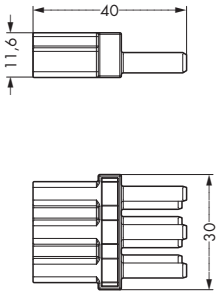

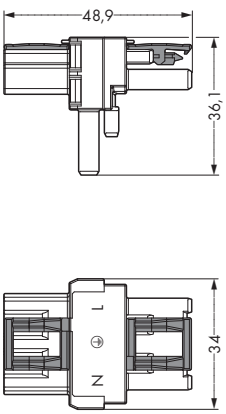

h-Distribution Connectors, 3 Poles

250 V/4 kV/3 25 A ❶ Approvals	250 V/4 kV/3 25 A ❶ Approvals

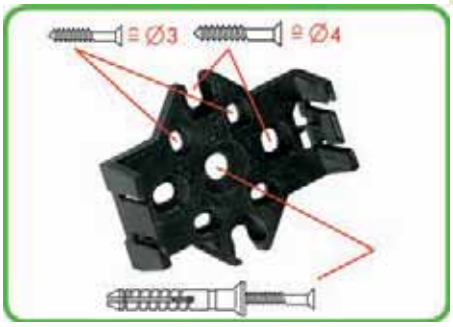

The mounting plates for distribution connectors can be mounted using commercially available screws or nail-drive anchors.

Color	Item no.	Pack.-unit	Color	Item no.	Pack.-unit
h-distribution connectors, bi-directional, plug - socket / socket			**h-distribution connectors, unidirectional, plug / socket - socket**		
black	**770-633** ●	50	black	**770-634** ●	50
white	**770-683** ○	50	white	**770-684** ○	50
			red	**770-934** ●	50
for "flying leads", with 3rd locking lever			for "flying leads", with 3rd locking lever		
black	**770-635** ●	50	black	**770-636** ●	50
white	**770-685** ○	50	white	**770-686** ○	50
			red	**770-936** ●	50
black	**770-623**	25	black	**770-623**	25
white	**770-673**	25	white	**770-673**	25
black	**770-601**	250	black	**770-601**	250
black	**770-201**	100	black	**770-201**	100
white	**770-221**	100	white	**770-221**	100

The distribution connectors are latched when mounted on the mounting plate.

All distribution connector connections are locked and protected against accidental disconnection directly after mating.
Locking of any connection is released using a screw-driver, even if all connections are used.

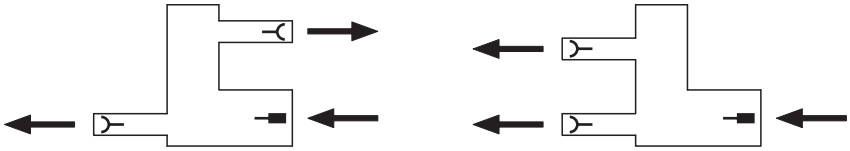

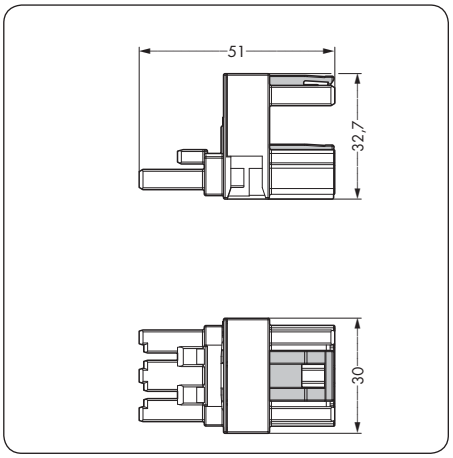

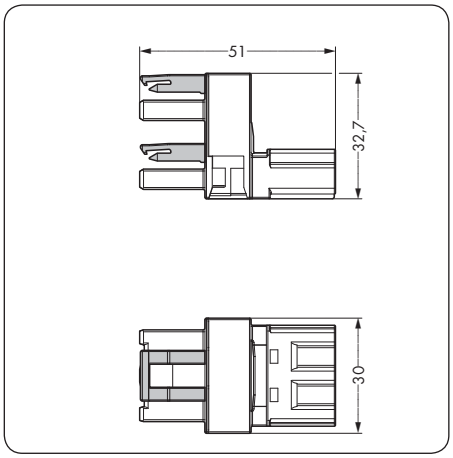

To release the distribution connector, unlock the latch using a screwdriver.

WINSTA® MIDI

Distribution Connectors, 3 Poles

	250 V/4 kV/3 25 A ❶ Approvals	250 V/4 kV/3 25 A ❶ Approvals

Description	Color	Item no.		Pack.-unit	Color	Item no.		Pack.-unit
Distribution connectors, pluggable	**Distribution connectors, 3-way, 1 x plug / 3 x socket**				**Distribution connectors, 5-way, 1 x plug / 5 x socket**			
	black	**770-607**	●	25	black	**770-608**	●	25
	white	**770-657**	○	25	white	**770-658**	○	25
	red	**770-907**	●	25				
Accessories								
Mounting plates, for snapping on distribution connectors, handling see page 35	black	**770-623**		25	black	**770-623**		25
	white	**770-673**		25	white	**770-673**		25
Fixing pin, for mounting plates, 6.1 x 2.5 - 4 mm / 0.24 x 0.098 - 0.157 in	black	**770-601**		250	black	**770-601**		250
Lockout caps, for socket, separable, 12 poles	black	**770-201**		100	black	**770-201**		100
	white	**770-221**		100	white	**770-221**		100

Info	Dimensions (in mm)

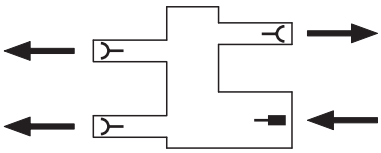

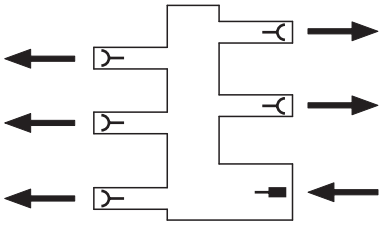

❶ Approval data can be found in the online catalog at www.wagocatalog.com

❷ LL = Locking lever

● black	Coding A	(L ⏚ N)
○ white	Coding A	(L ⏚ N)
● red	Coding P	(L ⏚ N)

Please find some information on the different codings on pages 146 and 147

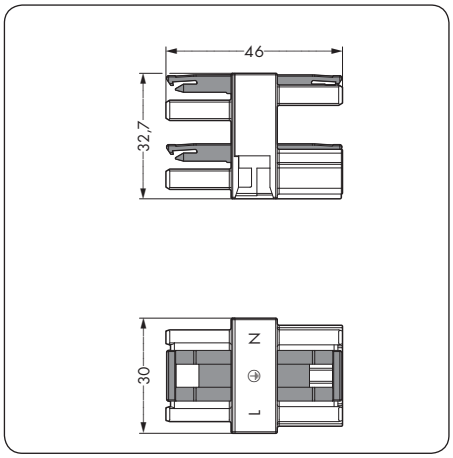

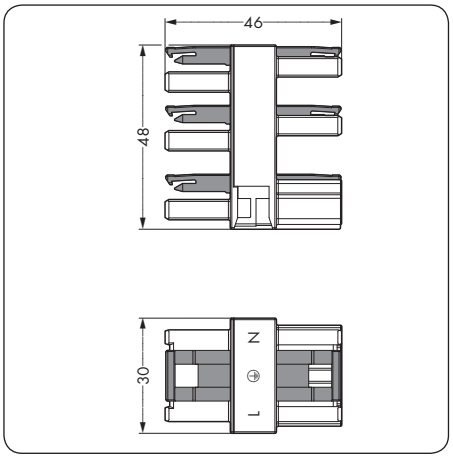

250 V/4 kV/3 25 A ❶ Approvals	250 V/4 kV/3 25 A ❶ Approvals

Color	Item no.		Pack.-unit	Color	Item no.		Pack.-unit
Distribution connectors for single-pole switch or series circuits				**Distribution connectors for single-pole switch or two-way circuits**			
1 x plug Coding A, LL ❷ black/white				1 x plug Coding A, LL ❷ black/white			
2 x socket Coding A, LL ❷ black/white				2 x socket Coding A, LL ❷ black/white			
2 x socket Coding A (lighting fixtures), LL ❷ white/black				1 x socket Coding A (lighting fixtures), LL ❷ white/black			
1 x socket Coding S (switches), LL ❷ brown				2 x socket Coding S (switches), LL ❷ brown			
black	**770-637**	●	10	black	**770-638**	●	10
white	**770-687**	○	10	white	**770-688**	○	10
black	**770-623**		25	black	**770-623**		25
white	**770-673**		25	white	**770-673**		25
black	**770-601**		250	black	**770-601**		250
black	**770-201**		100	black	**770-201**		100
white	**770-221**		100	white	**770-221**		100

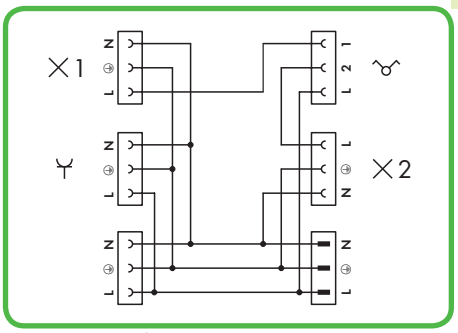

Internal circuit of the 770-637 distribution connector for single-pole switch or series circuits.

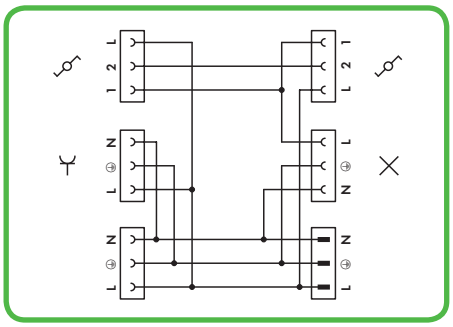

Internal circuit of the 770-638 distribution connector for single-pole switch or two-way circuits.

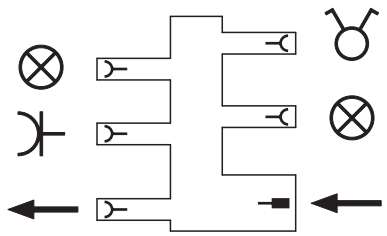

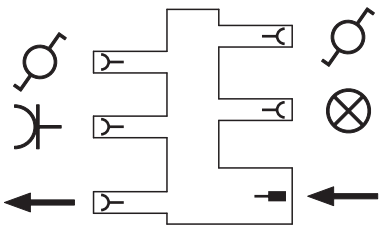

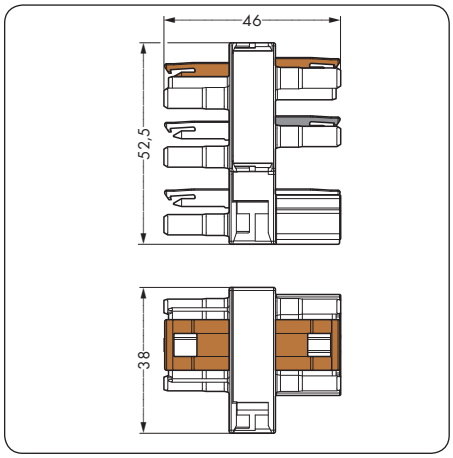

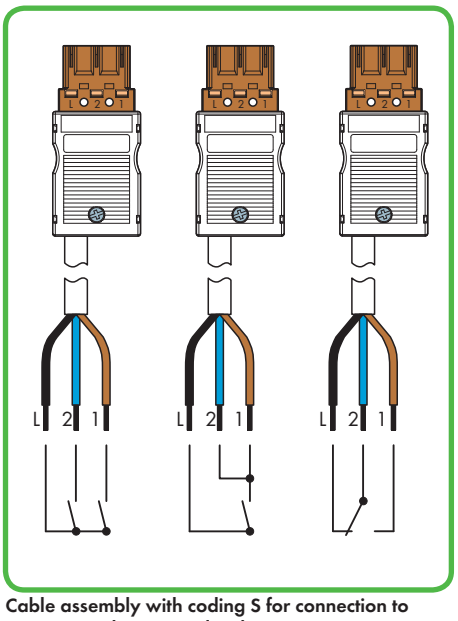

Cable assembly with coding S for connection to 770-637 and 770-638 distribution connectors see page 40.

Left: series circuit
Center: single-pole switch
Right: two-way circuit

Shorting plug see page 30

WINSTA® MIDI

Cable Assemblies 3 x 1.5 mm²/AWG 16

PVC H05VV-F 3G1.5
halogen-free H05Z1Z1-F 3G1.5

250 V/4 kV/3 16 A

Wire ends bonded 9 mm/0.35 in
❶ Approvals

Interconnecting cables, socket - plug

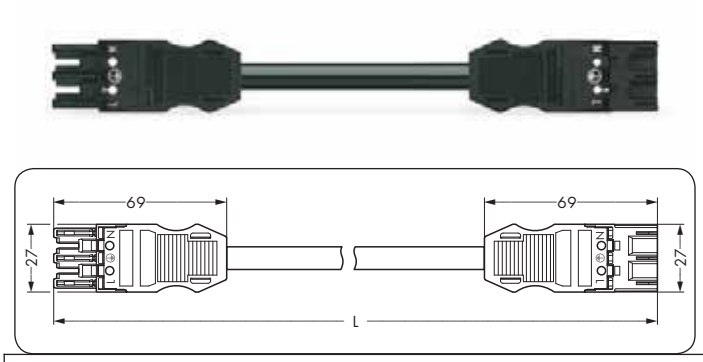

Length	Item no. black	Item no. white	Item no. black	Item no. white
Coding A ● ○				
	PVC		halogen-free	
1 m	771-9993/006-101	.../006-102	771-9993/016-101	.../016-102
2 m	771-9993/006-201	.../006-202	771-9993/016-201	.../016-202
3 m	771-9993/006-301	.../006-302	771-9993/016-301	.../016-302
4 m	771-9993/006-401	.../006-402	771-9993/016-401	.../016-402
5 m	771-9993/006-501	.../006-502	771-9993/016-501	.../016-502
6 m	771-9993/006-601	.../006-602	771-9993/016-601	.../016-602
7 m	771-9993/006-701	.../006-702	771-9993/016-701	.../016-702
8 m	771-9993/006-801	.../006-802	771-9993/016-801	.../016-802

Connecting cables, socket - free end

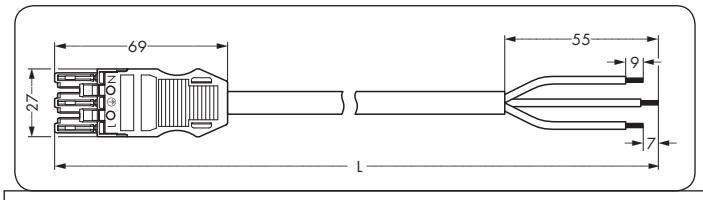

Length	Item no. black	Item no. white	Item no. black	Item no. white
Coding A ● ○				
	PVC		halogen-free	
1 m	771-9993/106-101	.../106-102	771-9993/116-101	.../116-102
2 m	771-9993/106-201	.../106-202	771-9993/116-201	.../116-202
3 m	771-9993/106-301	.../106-302	771-9993/116-301	.../116-302
4 m	771-9993/106-401	.../106-402	771-9993/116-401	.../116-402
5 m	771-9993/106-501	.../106-502	771-9993/116-501	.../116-502
6 m	771-9993/106-601	.../106-602	771-9993/116-601	.../116-602
7 m	771-9993/106-701	.../106-702	771-9993/116-701	.../116-702
8 m	771-9993/106-801	.../106-802	771-9993/116-801	.../116-802

Connecting cables, plug - free end

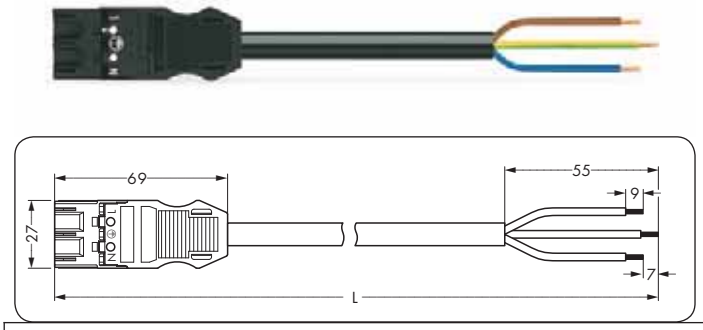

Length	Item no. black	Item no. white	Item no. black	Item no. white
Coding A ● ○				
	PVC		halogen-free	
1 m	771-9993/206-101	.../206-102	771-9993/216-101	.../216-102
2 m	771-9993/206-201	.../206-202	771-9993/216-201	.../216-202
3 m	771-9993/206-301	.../206-302	771-9993/216-301	.../216-302
4 m	771-9993/206-401	.../206-402	771-9993/216-401	.../216-402
5 m	771-9993/206-501	.../206-502	771-9993/216-501	.../216-502
6 m	771-9993/206-601	.../206-602	771-9993/216-601	.../216-602
7 m	771-9993/206-701	.../206-702	771-9993/216-701	.../216-702
8 m	771-9993/206-801	.../206-802	771-9993/216-801	.../216-802

Info

❶ Approval data can be found in the online catalog at www.wagocatalog.com
Marine approvals (GL, LR, NV) relate exclusively to cables approved for marine applications!

Other cables on request

● black	Coding A	(L ⏚ N)
○ white	Coding A	(L ⏚ N)
● red	Coding P	(L ⏚ N)

Please find some information on the different codings on pages 146 and 147

Accessories

Locking levers, manually operated,

for "flying leads"		
black	**770-101**	100 (4 x 25)
white	**770-121**	100 (4 x 25)

Locking levers, tool operated,

for "flying leads"		
black	**770-111**	100 (4 x 25)
white	**770-131**	100 (4 x 25)

Lockout caps, for socket, separable, 12 poles

black	**770-201**	100
white	**770-221**	100

Coding pin, for plug

gray	**770-401**	100

PVC H05VV-F 3G1.5
halogen-free H05Z1Z1-F 3G1.5

250 V/4 kV/3 16 A

Wire ends bonded 9 mm/0.35 in
❶ Approvals

Interconnecting cables, socket - plug

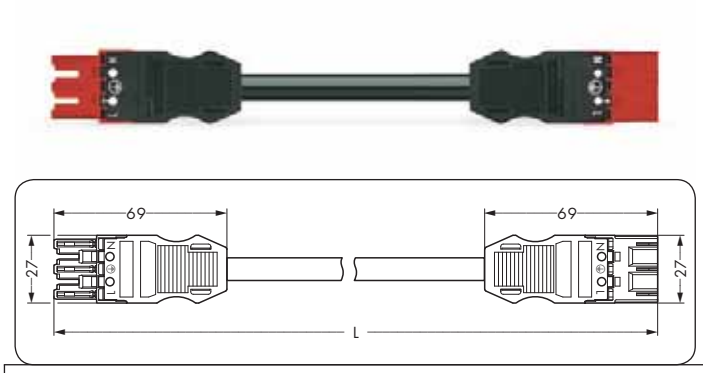

Length	Item no. black	Item no. black
Coding P		
	PVC	halogen-free
1 m	771-9973/006-101	771-9973/016-101
2 m	771-9973/006-201	771-9973/016-201
3 m	771-9973/006-301	771-9973/016-301
4 m	771-9973/006-401	771-9973/016-401
5 m	771-9973/006-501	771-9973/016-501
6 m	771-9973/006-601	771-9973/016-601
7 m	771-9973/006-701	771-9973/016-701
8 m	771-9973/006-801	771-9973/016-801

Connecting cables, socket - free end

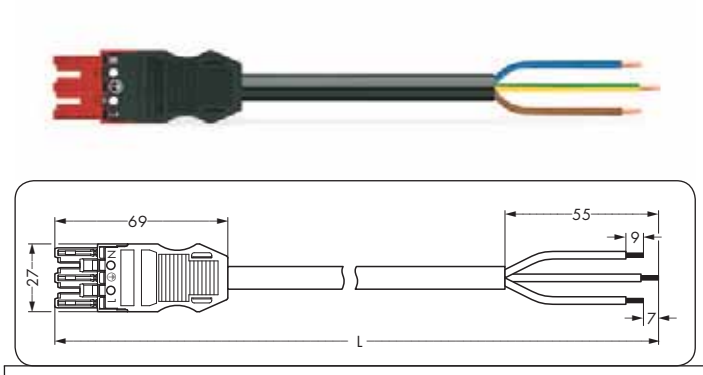

Length	Item no. black	Item no. black
Coding P		
	PVC	halogen-free
1 m	771-9973/106-101	771-9973/116-101
2 m	771-9973/106-201	771-9973/116-201
3 m	771-9973/106-301	771-9973/116-301
4 m	771-9973/106-401	771-9973/116-401
5 m	771-9973/106-501	771-9973/116-501
6 m	771-9973/106-601	771-9973/116-601
7 m	771-9973/106-701	771-9973/116-701
8 m	771-9973/106-801	771-9973/116-801

Connecting cables, plug - free end

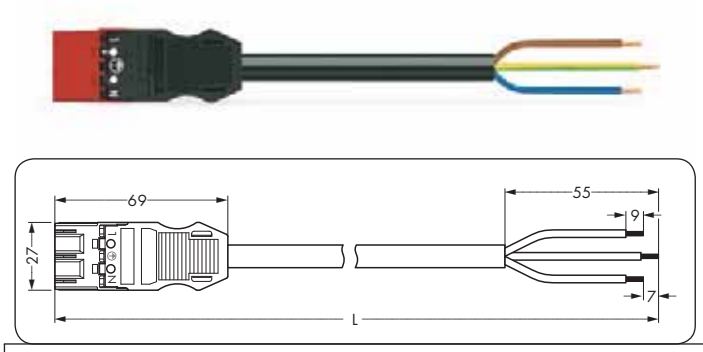

Length	Item no. black	Item no. black
Coding P		
	PVC	halogen-free
1 m	771-9973/206-101	771-9973/216-101
2 m	771-9973/206-201	771-9973/216-201
3 m	771-9973/206-301	771-9973/216-301
4 m	771-9973/206-401	771-9973/216-401
5 m	771-9973/206-501	771-9973/216-501
6 m	771-9973/206-601	771-9973/216-601
7 m	771-9973/206-701	771-9973/216-701
8 m	771-9973/206-801	771-9973/216-801

Lengths	Pack.-unit
1 m	50
2, 3, 4 m	25
5, 6 m	15
7, 8 m	10
Other lengths on request	

Accessories

Locking levers, manually operated,

for "flying leads"			
black	**770-101**	100 (4 x 25)
white	**770-121**	100 (4 x 25)

Locking levers, tool operated,

for "flying leads"		
black	**770-111**	100 (4 x 25)
white	**770-131**	100 (4 x 25)

Lockout caps, for socket, separable, 12 poles

black	**770-201**	100
white	**770-221**	100

Coding pin, for plug

gray	**770-401**	100

WINSTA® MIDI

Cable Assemblies 3 x 1.5 mm²/AWG 16

PVC H05VV-F 3x1.5
halogen-free H05Z1Z1-F 3x1.5

250 V/4 kV/3 16 A

Wire ends bonded 9 mm/0.35 in
❶ Approvals

Interconnecting cables, plug - free end ❷

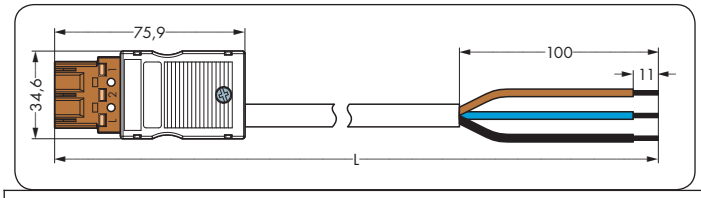

Connecting cables for distribution connectors (series and two-way circuits), coding S ●

Length	Item no. black (PVC)	Item no. black (halogen-free)
1 m	771-8973/206-104	771-8973/216-104
2 m	771-8973/206-204	771-8973/216-204
3 m	771-8973/206-304	771-8973/216-304
4 m	771-8973/206-404	771-8973/216-404
5 m	771-8973/206-504	771-8973/216-504
6 m	771-8973/206-604	771-8973/216-604
7 m	771-8973/206-704	771-8973/216-704
8 m	771-8973/206-804	771-8973/216-804

Connecting cables, socket - Schuko plug, angled

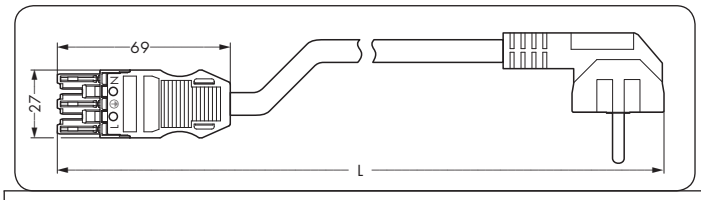

Coding A ● ○

Length	Item no. black (PVC)	Item no. white
1 m	771-9993/306-101	.../306-102
2 m	771-9993/306-201	.../306-202
3 m	771-9993/306-301	.../306-302
4 m	771-9993/306-401	.../306-402
5 m	771-9993/306-501	.../306-502
6 m	771-9993/306-601	.../306-602
7 m	771-9993/306-701	.../306-702
8 m	771-9993/306-801	.../306-802

Connecting cables, plug - Schuko socket

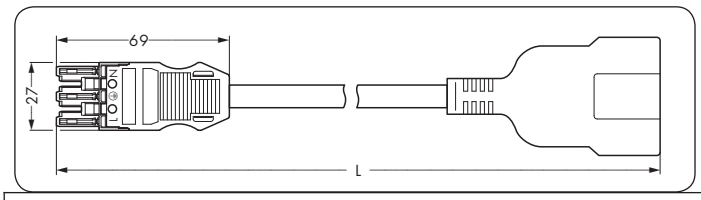

Coding A ● ○

Length	Item no. black (PVC)	Item no. white
1 m	771-9993/406-101	.../406-102
2 m	771-9993/406-201	.../406-202
3 m	771-9993/406-301	.../406-302
4 m	771-9993/406-401	.../406-402
5 m	771-9993/406-501	.../406-502
6 m	771-9993/406-601	.../406-602
7 m	771-9993/406-701	.../406-702
8 m	771-9993/406-801	.../406-802

Info

❶ Approval data can be found in the online catalog at www.wagocatalog.com
Marine approvals (GL, LR, NV) relate exclusively to cables approved for marine applications!
Other cables on request

❷ PVC H05VV-F 3 x 1.5
halogen-free H05Z1Z1-F 3 x 1.5
● black Coding A (L ⏚ N)
○ white Coding A (L ⏚ N)
● brown Coding S (L 2 1)

Please find some information on the different codings on pages 146 and 147

Accessories

Locking levers, manually operated,

for "flying leads"		
black	770-101	100 (4 x 25)
white	770-121	100 (4 x 25)

Locking levers, tool operated,

for "flying leads"		
black	770-111	100 (4 x 25)
white	770-131	100 (4 x 25)

Lockout caps, for socket, separable, 12 poles

black	770-201	100
white	770-221	100

Coding pin, for plug

gray	770-401	100

Cable Assemblies 3 x 1 mm² / 3 x 0.75 mm²/AWG 18

PVC H05VV-F 3G1.0 10 A ❸
H05VV-F 3G0.75 4 A ❹

250 V/4 kV/3
❶ **Approvals**

Connecting cables, plug - cold equipment coupling, angled ❸

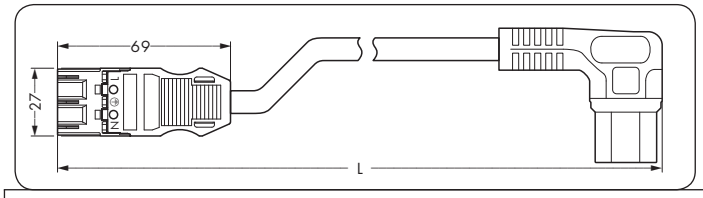

Length	Item no. black	Item no. white
Coding A ● ○		
PVC		
1 m	**771-9993/805-101**	.../805-102
2 m	**771-9993/805-201**	.../805-202
3 m	**771-9993/805-301**	.../805-302
4 m	**771-9993/805-401**	.../805-402
5 m	**771-9993/805-501**	.../805-502
6 m	**771-9993/805-601**	.../805-602
7 m	**771-9993/805-701**	.../805-702
8 m	**771-9993/805-801**	.../805-802

Plug - lamp socket E 27 ❹

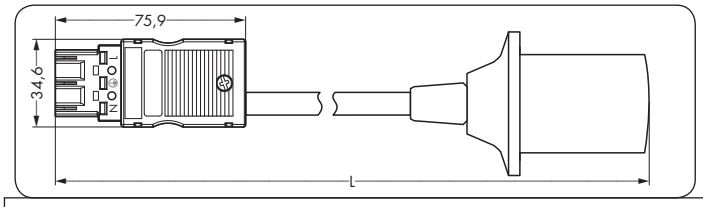

Length	Item no. black
Coding A ●	
e.g., for temporary construction site lighting	
0.5 m	**771-8993/1004-051**

Other lengths on request

Lengths	Pack.-unit
1 m	50
2, 3, 4 m	25
5, 6 m	15
7, 8 m	10

Other lengths on request

Accessories

Locking levers, manually operated,

for "flying leads"		
black	**770-101**	100 (4 x 25)
white	**770-121**	100 (4 x 25)

Locking levers, tool operated,

for "flying leads"		
black	**770-111**	100 (4 x 25)
white	**770-131**	100 (4 x 25)

Coding pin, for plug

gray	**770-401**	100

WINSTA® MIDI

Cable Assemblies 3 x 2.5 mm²/AWG 14

PVC H05VV-F 3G2.5
halogen-free H05Z1Z1-F 3G2.5

250 V/4 kV/3 20 A

Wire ends bonded 9 mm/0.35 in
❶ Approvals

Interconnecting cables, socket - plug

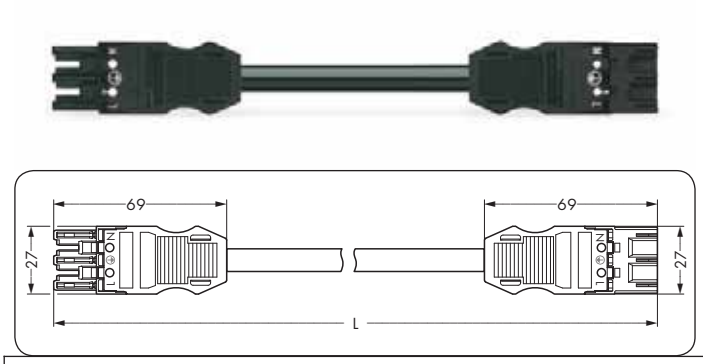

Length	Item no. black	Item no. white	Item no. black	Item no. white
Coding A ● ○				
	PVC		halogen-free	
1 m	771-9993/007-101	.../007-102	771-9993/017-101	.../017-102
2 m	771-9993/007-201	.../007-202	771-9993/017-201	.../017-202
3 m	771-9993/007-301	.../007-302	771-9993/017-301	.../017-302
4 m	771-9993/007-401	.../007-402	771-9993/017-401	.../017-402
5 m	771-9993/007-501	.../007-502	771-9993/017-501	.../017-502
6 m	771-9993/007-601	.../007-602	771-9993/017-601	.../017-602
7 m	771-9993/007-701	.../007-702	771-9993/017-701	.../017-702
8 m	771-9993/007-801	.../007-802	771-9993/017-801	.../017-802

Connecting cables, socket - free end

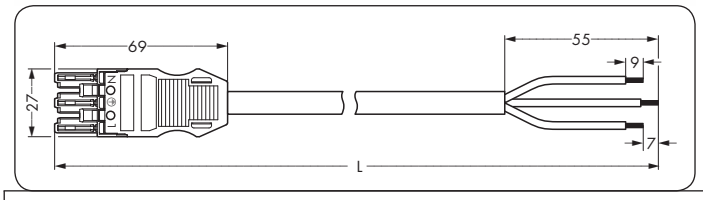

Length	Item no. black	Item no. white	Item no. black	Item no. white
Coding A ● ○				
	PVC		halogen-free	
1 m	771-9993/107-101	.../107-102	771-9993/117-101	.../117-102
2 m	771-9993/107-201	.../107-202	771-9993/117-201	.../117-202
3 m	771-9993/107-301	.../107-302	771-9993/117-301	.../117-302
4 m	771-9993/107-401	.../107-402	771-9993/117-401	.../117-402
5 m	771-9993/107-501	.../107-502	771-9993/117-501	.../117-502
6 m	771-9993/107-601	.../107-602	771-9993/117-601	.../117-602
7 m	771-9993/107-701	.../107-702	771-9993/117-701	.../117-702
8 m	771-9993/107-801	.../107-802	771-9993/117-801	.../117-802

Connecting cables, plug - free end

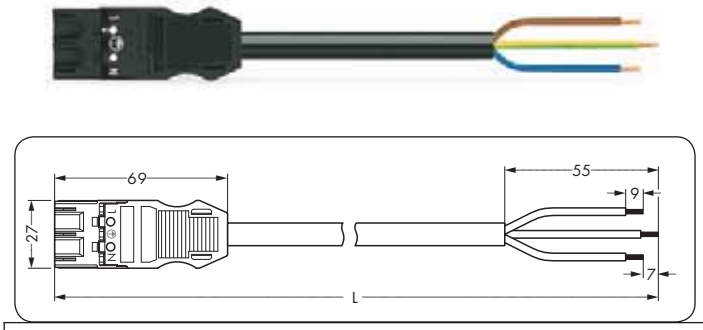

Length	Item no. black	Item no. white	Item no. black	Item no. white
Coding A ● ○				
	PVC		halogen-free	
1 m	771-9993/207-101	.../207-102	771-9993/217-101	.../217-102
2 m	771-9993/207-201	.../207-202	771-9993/217-201	.../217-202
3 m	771-9993/207-301	.../207-302	771-9993/217-301	.../217-302
4 m	771-9993/207-401	.../207-402	771-9993/217-401	.../217-402
5 m	771-9993/207-501	.../207-502	771-9993/217-501	.../217-502
6 m	771-9993/207-601	.../207-602	771-9993/217-601	.../217-602
7 m	771-9993/207-701	.../207-702	771-9993/217-701	.../217-702
8 m	771-9993/207-801	.../207-802	771-9993/217-801	.../217-802

Info

❶ Approval data can be found in the online catalog at www.wagocatalog.com
Marine approvals (GL, LR, NV) relate exclusively to cables approved for marine applications!

Other cables on request

● black	Coding A	(L ⏚ N)
○ white	Coding A	(L ⏚ N)
● red	Coding P	(L ⏚ N)

Please find some information on the different codings on pages 146 and 147

Accessories

Locking levers, manually operated,

	for "flying leads"		
	black	**770-101**	100 (4 x 25)
	white	**770-121**	100 (4 x 25)

Locking levers, tool operated,

	for "flying leads"		
	black	**770-111**	100 (4 x 25)
	white	**770-131**	100 (4 x 25)

Lockout caps, for socket, separable, 12 poles

black	**770-201**	100
white	**770-221**	100

Coding pin, for plug

gray	**770-401**	100

PVC H05VV-F 3G2.5
halogen-free H05Z1Z1-F 3G2.5

250 V/4 kV/3 20 A

Wire ends bonded 9 mm/0.35 in
❶ Approvals

Interconnecting cables, socket - plug

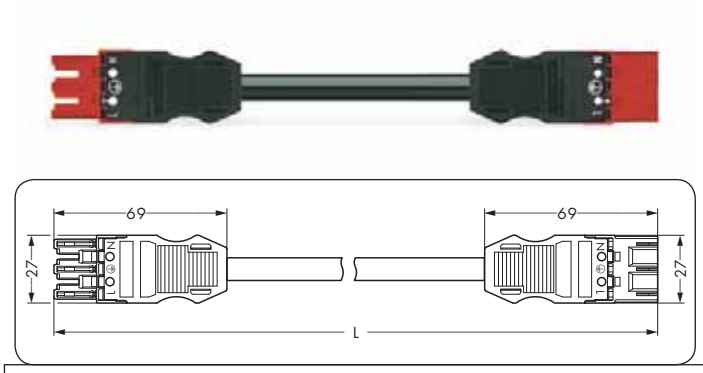

Length	Item no. black	Item no. black
Coding P		
	PVC	halogen-free
1 m	771-9973/007-101	771-9973/017-101
2 m	771-9973/007-201	771-9973/017-201
3 m	771-9973/007-301	771-9973/017-301
4 m	771-9973/007-401	771-9973/017-401
5 m	771-9973/007-501	771-9973/017-501
6 m	771-9973/007-601	771-9973/017-601
7 m	771-9973/007-701	771-9973/017-701
8 m	771-9973/007-801	771-9973/017-801

Connecting cables, socket - free end

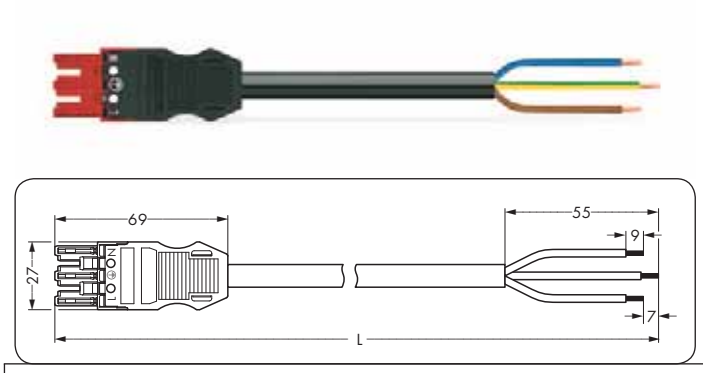

Length	Item no. black	Item no. black
Coding P		
	PVC	halogen-free
1 m	771-9973/107-101	771-9973/117-101
2 m	771-9973/107-201	771-9973/117-201
3 m	771-9973/107-301	771-9973/117-301
4 m	771-9973/107-401	771-9973/117-401
5 m	771-9973/107-501	771-9973/117-501
6 m	771-9973/107-601	771-9973/117-601
7 m	771-9973/107-701	771-9973/117-701
8 m	771-9973/107-801	771-9973/117-801

Connecting cables, plug - free end

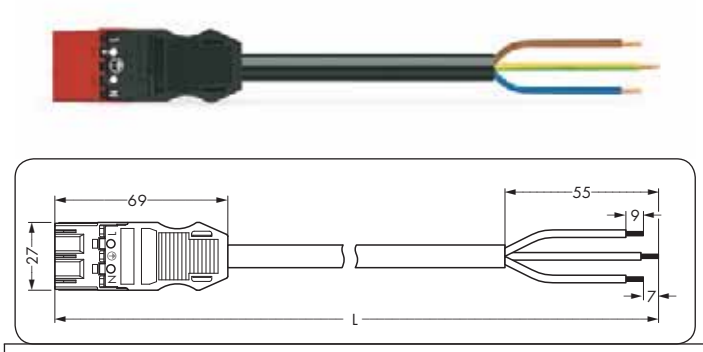

Length	Item no. black	Item no. black
Coding P		
	PVC	halogen-free
1 m	771-9973/207-101	771-9973/217-101
2 m	771-9973/207-201	771-9973/217-201
3 m	771-9973/207-301	771-9973/217-301
4 m	771-9973/207-401	771-9973/217-401
5 m	771-9973/207-501	771-9973/217-501
6 m	771-9973/207-601	771-9973/217-601
7 m	771-9973/207-701	771-9973/217-701
8 m	771-9973/207-801	771-9973/217-801

Lengths	Pack.-unit
1 m	50
2, 3, 4 m	25
5, 6 m	15
7, 8 m	10
Other lengths on request	

Accessories

Locking levers, manually operated,

for "flying leads"			
black	**770-101**	100 (4 x 25)
white	**770-121**	100 (4 x 25)

Locking levers, tool operated,

for "flying leads"		
black	**770-111**	100 (4 x 25)
white	**770-131**	100 (4 x 25)

Lockout caps, for socket, separable, 12 poles

black	**770-201**	100
white	**770-221**	100

Coding pin, for plug

gray	**770-401**	100

WINSTA® MIDI

Sockets and Plugs, 4 Poles

	2 x 0.5 – 4 mm² ❶ 400 V/6 kV/3 25 A	2 x AWG 20 - 12	2 x 0.5 – 4 mm² ❶ 400 V/6 kV/3 25 A	2 x AWG 20 - 12
	9 mm / 0.35 in		9 mm / 0.35 in	
	❷ Approvals		❷ Approvals	

Description	Color	Item no.	Pack.-unit	Color	Item no.	Pack.-unit
Connectors, 4 poles, with CAGE CLAMP®S connection	**Sockets with strain relief housing,** for 2 cables, diameter 9 - 13 mm / 0.35 - 0.51 in ❸			**Plugs with strain relief housing,** for 2 cables, diameter 9 - 13 mm / 0.35 - 0.51 in ❸		
	black	**770-104** ●	25	black	**770-114** ●	25
	white	**770-124** ○	25	white	**770-134** ○	25
Accessories						
Locking levers, manually operated, for "flying leads"						
	black	**770-101**	100 (4 x 25)	black	**770-101**	100 (4 x 25)
	white	**770-121**	100 (4 x 25)	white	**770-121**	100 (4 x 25)
Locking levers, tool operated, for "flying leads"						
	black	**770-111**	100 (4 x 25)	black	**770-111**	100 (4 x 25)
	white	**770-131**	100 (4 x 25)	white	**770-131**	100 (4 x 25)
Lockout caps, for socket, separable, 12 poles	black	**770-201**	100			
	white	**770-221**	100			
Coding pin, for plug						
				gray	**770-401**	100

Info

❶ Wire range: 0.5 - 4 mm² "s + f-st"
0.5 - 2.5 mm² "stranded"

❷ Approval data can be found in the online catalog at www.wagocatalog.com

❸ More strain relief housings
see page 46

● black	Coding A	(N ⏚ 2 1)
○ white	Coding A	(N ⏚ 2 1)
● gray	Coding B	(1 2 3 4)
● green	Coding Q	(N PE1 PE2 L)

Please find some information on the different codings on pages 146 and 147

Dimensions (in mm)

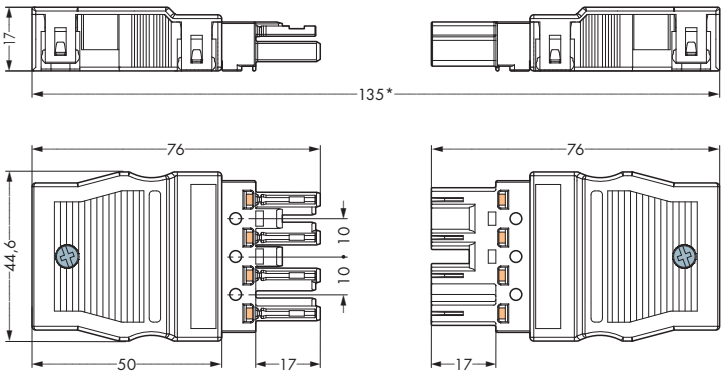

* Overall length of the connectors in mated condition

2 x 0.5 – 4 mm² ❶ 400 V/6 kV/3 25 A 2 x AWG 20 - 12 9 mm / 0.35 in ❷ Approvals	2 x 0.5 – 4 mm² ❶ 400 V/6 kV/3 25 A 2 x AWG 20 - 12 9 mm / 0.35 in ❷ Approvals

NOTE:
All products for fixed installations (snap-in versions, distribution connectors) are equipped with locking levers ex-factory, so that the plugs or sockets are always locked. Additional locking levers are only required for "flying leads" (plug/socket).

Color	Item no.	Pack.-unit	Color	Item no.	Pack.-unit
Sockets without strain relief housing			**Plugs without strain relief housing**		
black	**770-204**	50	black	**770-214**	50
white	**770-224**	50	white	**770-234**	50
gray	**770-244**	50	gray	**770-254**	50
For "Clean Earth" applications (up to 32 A)			For "Clean Earth" applications (up to 32 A)		
green	**770-1324**	50	green	**770-1334**	50
black	**770-101**	100 (4 x 25)	black	**770-101**	100 (4 x 25)
white	**770-121**	100 (4 x 25)	white	**770-121**	100 (4 x 25)
black	**770-111**	100 (4 x 25)	black	**770-111**	100 (4 x 25)
white	**770-131**	100 (4 x 25)	white	**770-131**	100 (4 x 25)
black	**770-201**	100			
white	**770-221**	100			
			gray	**770-401**	100

Snap on locking lever. Observe direction!
(Example shows 3-pole plug)

Locking lever, manually operated:
1.) Press on locking lever.
2.) Pull apart the connectors.
(Example shows 3-pole connector)

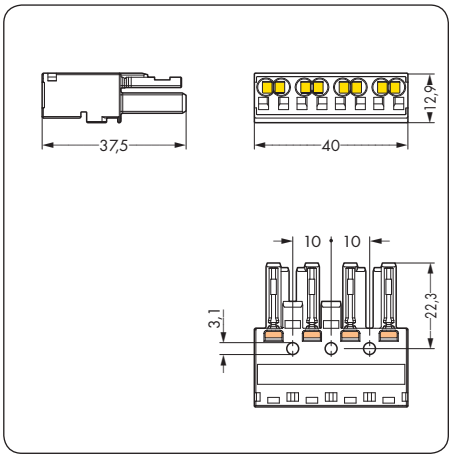

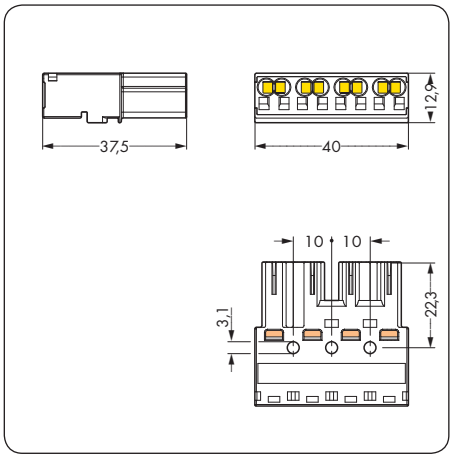

Locking lever, tool operated:
1.) Unlatch locking lever.
2.) Pull apart the connectors.
(Example shows 3-pole connector)

WINSTA® MIDI

Strain Relief Housings, 4 Poles, for Different Cable Diameters

	Snap-on type strain relief housing for - 4-pole sockets - 4-pole plugs ❶ Approvals	Snap-on type strain relief housing for - 4-pole sockets - 4-pole plugs ❶ Approvals

Description	Color	Item no.	Pack.-unit	Color	Item no.	Pack.-unit
Strain relief housings	**Strain relief housings,** for 2 cables, diameter 5 - 9 mm / 0.19 - 0.35 in ❷			**Strain relief housings,** for 2 cables, diameter 9 - 13 mm / 0.35 - 0.51 in ❷		
	black	**770-504/023-000**	50	black	**770-504**	50
	white	**770-514/023-000**	50	white	**770-514**	50
Accessories						
Marker strips, self-adhesive, on DIN A 1 card, strip length 182 mm / 7.16 in	Height 6 mm / 0.23 in Size of the marker field 38 x 6.5 mm / 1.49 x 0.25 in	**210-333**	100	Height 6 mm / 0.23 in Size of the marker field 38 x 6.5 mm / 1.49 x 0.25 in	**210-333**	100

Info	Dimensions (in mm)

❶ Approval data can be found in the online catalog at www.wagocatalog.com

❷ For H05VV and NYM cables
Other cables on request

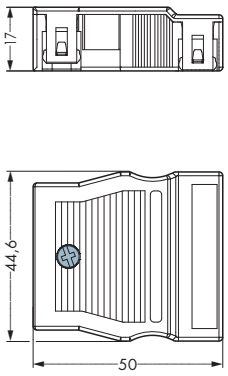

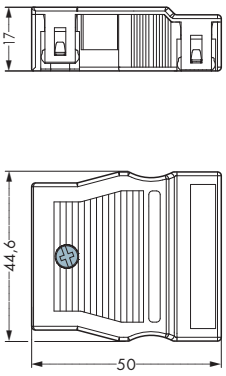

WINSTA

WINSTA® MIDI

Snap-In Sockets and Plugs, 4 Poles

	2 x 0.5 – 4 mm² ❶ 400 V/6 kV/3 25 A 9 mm / 0.35 in ❷ Approvals	2 x AWG 20 - 12

Description	Color	Item no.	Pack.-unit
Connectors, snap-in device connection, 4 poles, with CAGE CLAMP®S connection	**Sockets**		
	black	**770-704** ●	100
	white	**770-724** ○	100
	gray	**770-744** ●	100
	For "Clean Earth" applications (up to 32 A)		
	green	**770-2324** ●	50
Accessories			
Lockout caps, for cut-out			
	black	**770-644**	100
	white	**770-694**	100
Lockout caps, for socket, separable, 12 poles			
	black	**770-201**	100
	white	**770-221**	100
Coding pin, for plug			

Info	Dimensions (in mm)

❶ Wire range: 0.5 - 4 mm² "s + f-st"
0.5 - 2.5 mm² "stranded"

❷ Approval data can be found in the online catalog at www.wagocatalog.com

❸ Direct contact of the ground conductor on position PE1

● black	Coding A	(N ⏚ 2 1)
○ white	Coding A	(N ⏚ 2 1)
● gray	Coding B	(1 2 3 4)
● green	Coding Q	(N PE1 PE2 L)

Please find some information on the different codings on pages 146 and 147

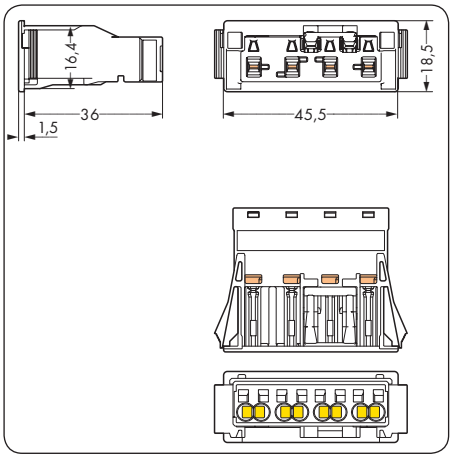

2 x 0.5 – 4 mm² ❶ 400 V/6 kV/3 25 A | 2 x AWG 20 - 12 9 mm / 0.35 in ❷ Approvals	2 x 0.5 – 4 mm² ❶ 400 V/6 kV/3 25 A | 2 x AWG 20 - 12 9 mm / 0.35 in ❷ Approvals

Color	Item no.	Pack.-unit	Color	Item no.	Pack.-unit
Plugs			**Plugs, with direct contacting of the ground conductor**		
black	**770-714** ●	100	black	**770-714/007-000** ●	100
white	**770-734** ○	100	white	**770-734/007-000** ○	100
gray	**770-754** ●	100			
For "Clean Earth" applications (up to 32 A)			For "Clean Earth" applications (up to 32 A)		
green	**770-2334** ●	50	green	**770-2334/007-000** ●	50 ❸
black	**770-644**	100	black	**770-644**	100
white	**770-694**	100	white	**770-694**	100
gray	**770-401**	100	gray	**770-401**	100

Direct contacting of the ground conductor

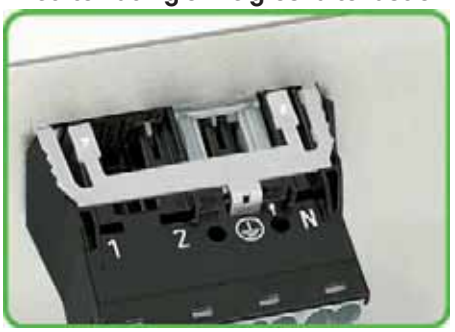

Varnish-piercing direct contacting of the earth conductor. ❸

Lockout cap

Seal unused cutout with lockout cap.

Cut-out dimensions

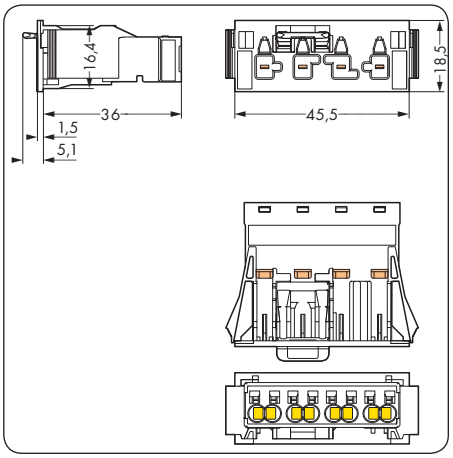

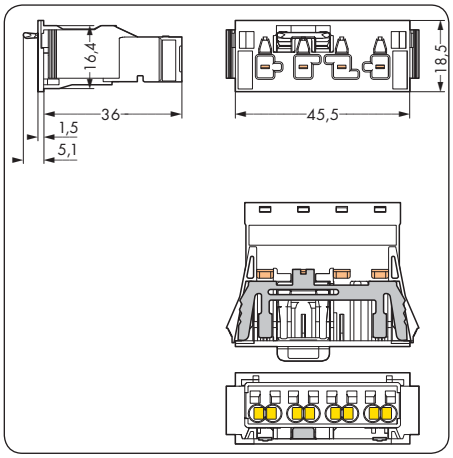

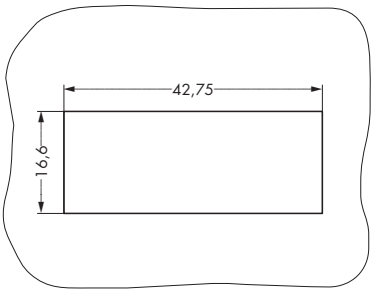

Panel thickness: 0.5 mm - 2 mm
Tolerance of the panel cutout: + 0.1 mm

WINSTA® MIDI

PCB Connectors, 4 Poles

	400 V/6 kV/3 25 A ❶ ❷ Approvals	400 V/6 kV/3 25 A ❶ ❷ Approvals

Description	Color	Item no.		Pack.-unit	Color	Item no.		Pack.-unit
PCB connectors,	**Sockets,** straight type				**Plugs,** straight type			
2 solder pins per pole								
	black	**770-804**	●	50	black	**770-814**	●	50
	white	**770-824**	○	50	white	**770-834**	○	50
	gray	**770-844**	◐	50	gray	**770-854**	◐	50
Accessories								
Lockout caps, for socket, separable, 12 poles	black	**770-201**		100				
	white	**770-221**		100				
Coding pin, for plug								
					gray	**770-401**		100

Info	Dimensions (in mm)

❶ Current load see table on page 51

❷ Approval data can be found in the online catalog at www.wagocatalog.com

● black	Coding A	(N ⏚ 2 1)
○ white	Coding A	(N ⏚ 2 1)
◐ gray	Coding B	(1 2 3 4)

Please find some information on the different codings on pages 146 and 147

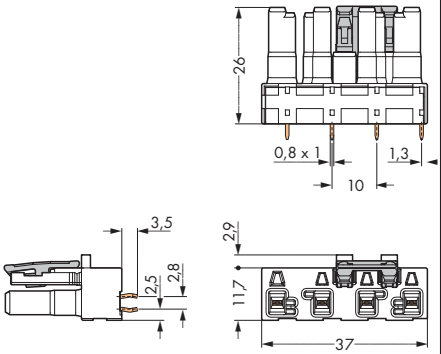

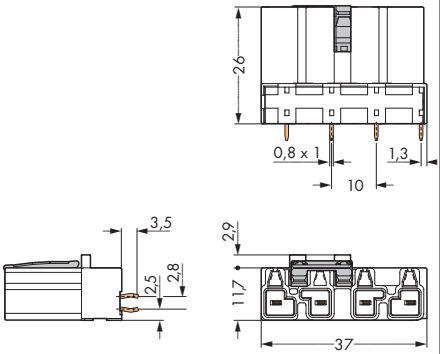

400 V/6 kV/3 **25 A ❶** **❷ Approvals**	**400 V/6 kV/3** **25 A ❶** **❷ Approvals**

Color	Item no.	Pack.-unit	Color	Item no.	Pack.-unit
Sockets, angled type			**Plugs,** angled type		
black	**770-804/011-000** ●	50	black	**770-814/011-000** ●	50
white	**770-824/011-000** ○	50	white	**770-834/011-000** ○	50
gray	**770-844/011-000** ●	50	gray	**770-854/011-000** ●	50
black	**770-201**	100			
white	**770-221**	100			
			gray	**770-401**	100

❶ **Depends on the PCB track dimensions**

Nominal current	Thickness of PCB track	Width of PCB track	Conductor cross section
16 A	70 µm one side	7 mm / 0.27 in	≙1.5 mm²/ AWG 16
20 A	70 µm one side	7 mm / 0.27 in	≙2.5 mm²/ AWG 14
25 A	105 µm both sides	7 mm / 0.27 in	≙ 4 mm²/ AWG 12

Hole patterns

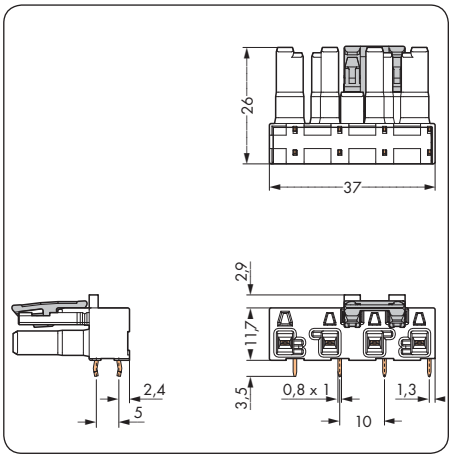

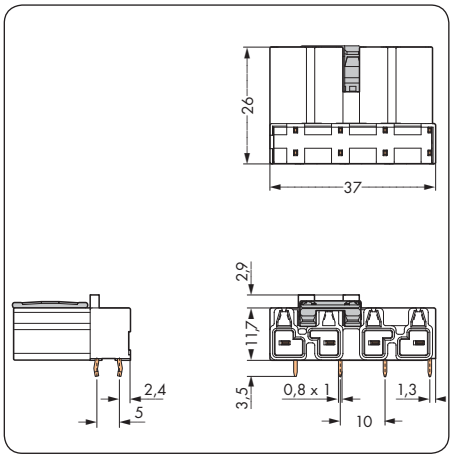

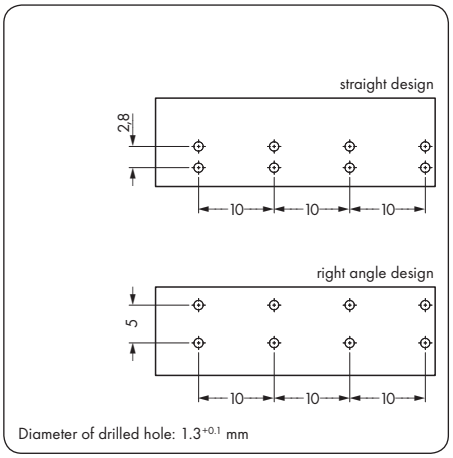

WINSTA® MIDI

T-Distribution Connectors, 4 Poles

400 V/6 kV/3
25 A

❶ Approvals

Description	Color	Item no.		Pack.-unit
Distribution connectors, pluggable	**T-distribution connectors, 1 x plug / 2 x socket**			
	black	**770-626**	●	50
	white	**770-676**	○	50
	for "flying leads", with 3rd locking lever			
	black	**770-627**	●	50
	white	**770-677**	○	50

Accessories

Lockout caps, for socket, separable, 12 poles	black	**770-201**	100
	white	**770-221**	100

Info	Dimensions (in mm)

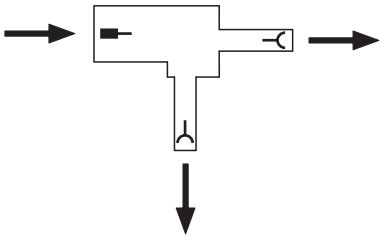

❶ Approval data can be found in the online catalog at www.wagocatalog.com

● black Coding A (N ⏚ 2 1)
○ white Coding A (N ⏚ 2 1)

Please find some information on the different codings on pages 146 and 147

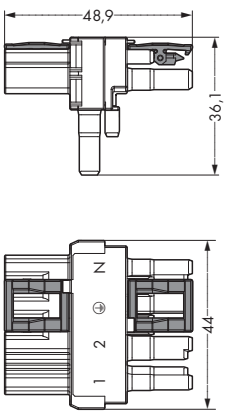

WINSTA

WINSTA® MIDI

Cable Assemblies 4 x 1.5 mm²/AWG 16

PVC H05VV-F 4G1.5
halogen-free H05Z1Z1-F 4G1.5

400 V/6 kV/3 16 A

Wire ends bonded 9 mm/0.35 in
❶ Approvals

Interconnecting cables, socket - plug

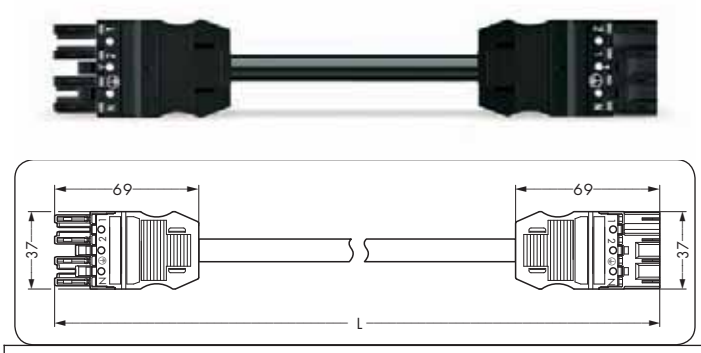

Length	Item no. black	Item no. white	Item no. black	Item no. white
Coding A ● ○				
	PVC		halogen-free	
1 m	771-9994/006-101	.../006-102	771-9994/016-101	.../016-102
2 m	771-9994/006-201	.../006-202	771-9994/016-201	.../016-202
3 m	771-9994/006-301	.../006-302	771-9994/016-301	.../016-302
4 m	771-9994/006-401	.../006-402	771-9994/016-401	.../016-402
5 m	771-9994/006-501	.../006-502	771-9994/016-501	.../016-502
6 m	771-9994/006-601	.../006-602	771-9994/016-601	.../016-602
7 m	771-9994/006-701	.../006-702	771-9994/016-701	.../016-702
8 m	771-9994/006-801	.../006-802	771-9994/016-801	.../016-802

Connecting cables, socket - free end

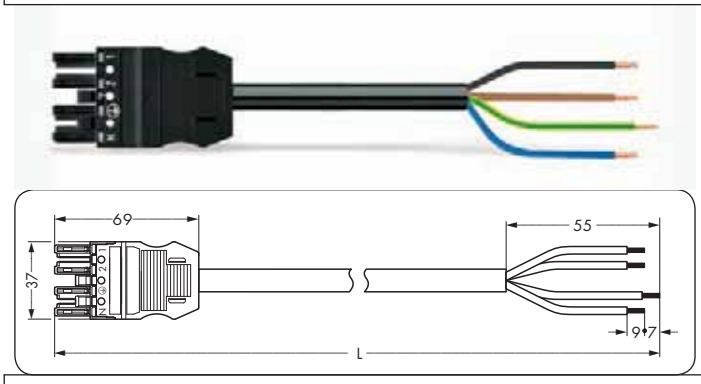

Length	Item no. black	Item no. white	Item no. black	Item no. white
Coding A ● ○				
	PVC		halogen-free	
1 m	771-9994/106-101	.../106-102	771-9994/116-101	.../116-102
2 m	771-9994/106-201	.../106-202	771-9994/116-201	.../116-202
3 m	771-9994/106-301	.../106-302	771-9994/116-301	.../116-302
4 m	771-9994/106-401	.../106-402	771-9994/116-401	.../116-402
5 m	771-9994/106-501	.../106-502	771-9994/116-501	.../116-502
6 m	771-9994/106-601	.../106-602	771-9994/116-601	.../116-602
7 m	771-9994/106-701	.../106-702	771-9994/116-701	.../116-702
8 m	771-9994/106-801	.../106-802	771-9994/116-801	.../116-802

Connecting cables, plug - free end

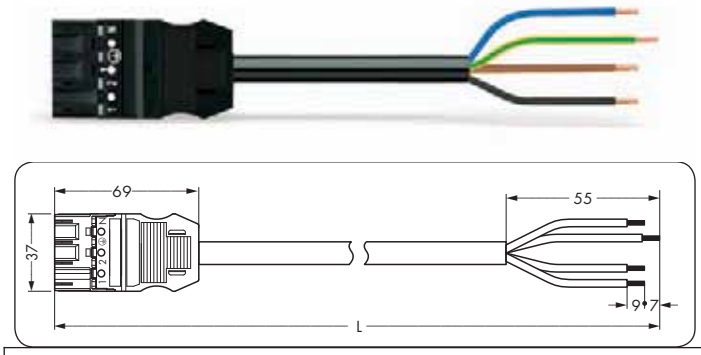

Length	Item no. black	Item no. white	Item no. black	Item no. white
Coding A ● ○				
	PVC		halogen-free	
1 m	771-9994/206-101	.../206-102	771-9994/216-101	.../216-102
2 m	771-9994/206-201	.../206-202	771-9994/216-201	.../216-202
3 m	771-9994/206-301	.../206-302	771-9994/216-301	.../216-302
4 m	771-9994/206-401	.../206-402	771-9994/216-401	.../216-402
5 m	771-9994/206-501	.../206-502	771-9994/216-501	.../216-502
6 m	771-9994/206-601	....	771-9994/216-601	....
7 m	771-9994/206-701	....	771-9994/216-701	....
8 m	771-9994/206-801	....	771-9994/216-801	....

Info

❶ Approval data can be found in the online catalog at www.wagocatalog.com
Marine approvals (GL, LR, NV) relate exclusively to cables approved for marine applications!

Other cables on request

● black Coding A (N ⏚ 2 1)
○ white Coding A (N ⏚ 2 1)

Please find some information on the different codings on pages 146 and 147

Accessories

Locking levers, manually operated,

for "flying leads"		
black	**770-101**	100 (4 x 25)
white	**770-121**	100 (4 x 25)

Locking levers, tool operated,

for "flying leads"		
black	**770-111**	100 (4 x 25)
white	**770-131**	100 (4 x 25)

Lockout caps, for socket, separable, 12 poles

black	**770-201**	100
white	**770-221**	100

Coding pin, for plug

gray	**770-401**	100

WINSTA

WINSTA® MIDI

Sockets and Plugs, 5 Poles

	2 x 0.5 – 4 mm² ❶ 400 V/6 kV/3 25 A	2 x AWG 20 - 12	2 x 0.5 – 4 mm² ❶ 400 V/6 kV/3 25 A	2 x AWG 20 - 12
	9 mm / 0.35 in		9 mm / 0.35 in	
	❷ Approvals		❷ Approvals	

Description	Color	Item no.	Pack.-unit	Color	Item no.	Pack.-unit
Connectors, 5 poles, with CAGE CLAMP®S connection	**Sockets with strain relief housing,** for 2 cables, diameter 9 - 13 mm / 0.35 - 0.51 in ❸			**Plugs with strain relief housing,** for 2 cables, diameter 9 - 13 mm / 0.35 - 0.51 in ❸		
	black	**770-105** ●	25	black	**770-115** ●	25
	white	**770-125** ○	25	white	**770-135** ○	25
Accessories						
Locking levers, manually operated, for "flying leads"						
	black	**770-101**	100 (4 x 25)	black	**770-101**	100 (4 x 25)
	white	**770-121**	100 (4 x 25)	white	**770-121**	100 (4 x 25)
Locking levers, tool operated, for "flying leads"						
	black	**770-111**	100 (4 x 25)	black	**770-111**	100 (4 x 25)
	white	**770-131**	100 (4 x 25)	white	**770-131**	100 (4 x 25)
Lockout caps, for socket, separable, 12 poles	black	**770-201**	100			
	white	**770-221**	100			
Coding pin, for plug						
				gray	**770-401**	100

Info

❶ Wire range: 0.5 - 4 mm² "s + f-st"
0.5 - 2.5 mm² "stranded"

❷ Approval data can be found in the online catalog at www.wagocatalog.com

❸ More strain relief housings
see pages 60 and 61

● black	Coding A	(N ⏚ L1 L2 L3)
○ white	Coding A	(N ⏚ L1 L2 L3)
● gray	Coding B	(1 2 3 4 5)
● blue	Coding I	(N ⏚ L DA- DA+)
● red	Coding P	(N ⏚ L1 L2 L3)
● green	Coding Q	(N PE1 PE2 PE3 L)

Please find some information on the different codings on pages 146 and 147

Dimensions (in mm)

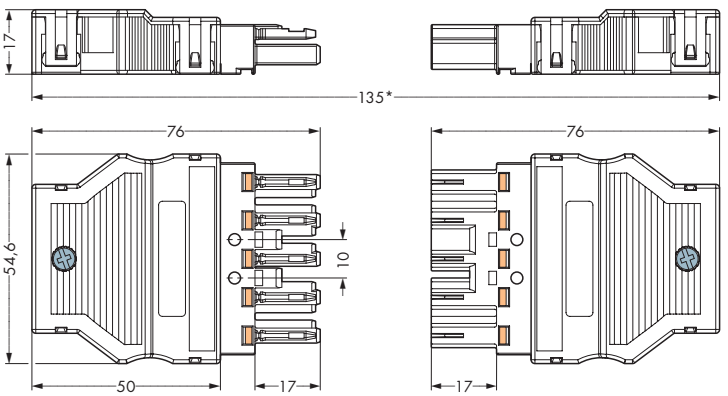

* Overall length of the connectors in mated condition

2 x 0.5 – 4 mm² ❶ 400 V/6 kV/3 25 A 2 x AWG 20 - 12 9 mm / 0.35 in ❷ Approvals	2 x 0.5 – 4 mm² ❶ 400 V/6 kV/3 25 A 2 x AWG 20 - 12 9 mm / 0.35 in ❷ Approvals

NOTE:
All products for fixed installations (snap-in versions, distribution connectors) are equipped with locking levers ex-factory, so that the plugs or sockets are always locked. Additional locking levers are only required for "flying leads" (plug/socket).

Color	Item no.	Pack.-unit	Color	Item no.	Pack.-unit
Sockets without strain relief housing			**Plugs without strain relief housing**		
black	**770-205**	50	black	**770-215**	50
white	**770-225**	50	white	**770-235**	50
gray	**770-245**	50	gray	**770-255**	50
blue	**770-1105**	50	blue	**770-1115**	50
red	**770-1305**	50	red	**770-1315**	50
For "Clean Earth" applications (up to 32 A)			For "Clean Earth" applications (up to 32 A)		
green	**770-1325**	50	green	**770-1335**	50
black	**770-101**	100 (4 x 25)	black	**770-101**	100 (4 x 25)
white	**770-121**	100 (4 x 25)	white	**770-121**	100 (4 x 25)
black	**770-111**	100 (4 x 25)	black	**770-111**	100 (4 x 25)
white	**770-131**	100 (4 x 25)	white	**770-131**	100 (4 x 25)
black	**770-201**	100			
white	**770-221**	100			
			gray	**770-401**	100

Snap on locking lever. Observe direction!
(Example shows 3-pole plug)

Locking lever, manually operated:
1.) Press on locking lever.
2.) Pull apart the connectors.
(Example shows 3-pole connector)

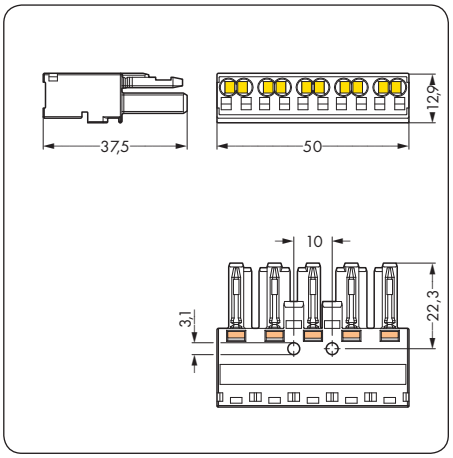

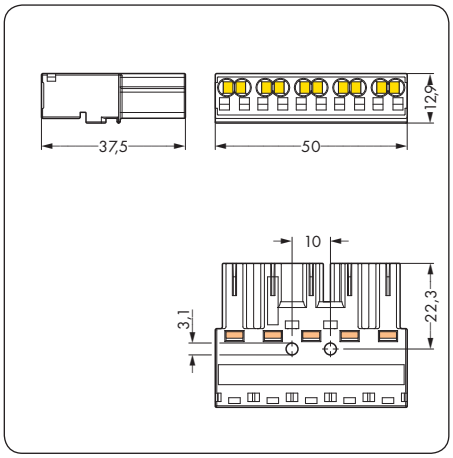

Locking lever, tool operated:
1.) Unlatch locking lever.
2.) Pull apart the connectors.
(Example shows 3-pole connector)

WINSTA® MIDI

Sockets and Plugs, 5 Poles, 1 Conductor

	0.5 – 4 mm² ❶ 400 V/6 kV/3 25 A	AWG 20 - 12	0.5 – 4 mm² ❶ 400 V/6 kV/3 25 A	AWG 20 - 12
	9 mm / 0.35 in		9 mm / 0.35 in	
	❷ Approvals		❷ Approvals	

Description	Color	Item no.	Pack.-unit	Color	Item no.	Pack.-unit
Connectors, 5 poles, 1-conductor connection, with CAGE CLAMP®S connection	**Sockets with strain relief housing,** for cable diameter 9 - 13 mm / 0.35 - 0.51 in ❸			**Plugs with strain relief housing,** for cable diameter 9 - 13 mm / 0.35 - 0.51 in ❸		
A generously dimensioned funneled conductor entry hole makes wire connection easier, especially with solid conductors (e.g. NYM)	black	**770-305** ●	25	black	**770-315** ●	25
	white	**770-325** ○	25	white	**770-335** ○	25
Accessories						
Locking levers, manually operated, for "flying leads"						
	black	**770-101**	100 (4 x 25)	black	**770-101**	100 (4 x 25)
	white	**770-121**	100 (4 x 25)	white	**770-121**	100 (4 x 25)
Locking levers, tool operated, for "flying leads"						
	black	**770-111**	100 (4 x 25)	black	**770-111**	100 (4 x 25)
	white	**770-131**	100 (4 x 25)	white	**770-131**	100 (4 x 25)
Lockout caps, for socket, separable, 12 poles	black	**770-201**	100			
	white	**770-221**	100			
Coding pin, for plug						
				gray	**770-401**	100

Info

❶ **Wire range:** 0.5 - 4 mm² "s + f-st"
0.5 - 2.5 mm² "stranded"

❷ Approval data can be found in the online catalog at www.wagocatalog.com

❸ More strain relief housings
see pages 60 and 61

● black Coding A (N ⏚ L1 L2 L3)
○ white Coding A (N ⏚ L1 L2 L3)

Please find some information on the different codings on pages 146 and 147

Dimensions (in mm)

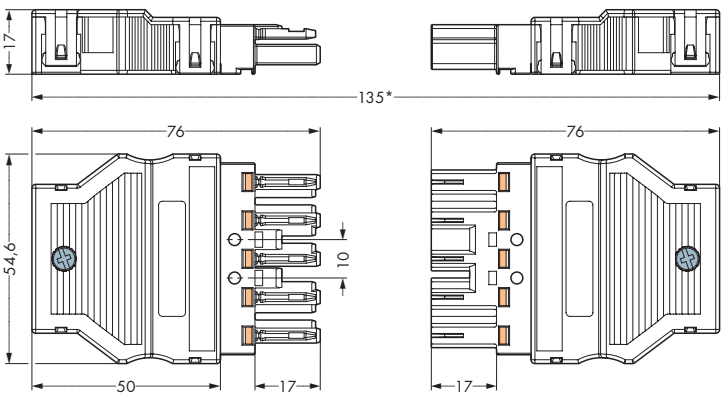

* Overall length of the connectors in mated condition

0.5 – 4 mm² ❶ 400 V/6 kV/3 25 A AWG 20 - 12 9 mm / 0.35 in ❷ Approvals	0.5 – 4 mm² ❶ 400 V/6 kV/3 25 A AWG 20 - 12 9 mm / 0.35 in ❷ Approvals

NOTE:
All products for fixed installations (snap-in versions, distribution connectors) are equipped with locking levers ex-factory, so that the plugs or sockets are always locked. Additional locking levers are only required for "flying leads" (plug/socket).

Color	Item no.	Pack.-unit	Color	Item no.	Pack.-unit
Sockets without strain relief housing			Plugs without strain relief housing		
black	**770-405** ●	50	black	**770-415** ●	50
white	**770-425** ○	50	white	**770-435** ○	50
black	**770-101**	100 (4 x 25)	black	**770-101**	100 (4 x 25)
white	**770-121**	100 (4 x 25)	white	**770-121**	100 (4 x 25)
black	**770-111**	100 (4 x 25)	black	**770-111**	100 (4 x 25)
white	**770-131**	100 (4 x 25)	white	**770-131**	100 (4 x 25)
black	**770-201**	100			
white	**770-221**	100			
			gray	**770-401**	100

Snap on locking lever. Observe direction!
(Example shows 3-pole plug)

Locking lever, manually operated:
1.) Press on locking lever.
2.) Pull apart the connectors.
(Example shows 3-pole connector)

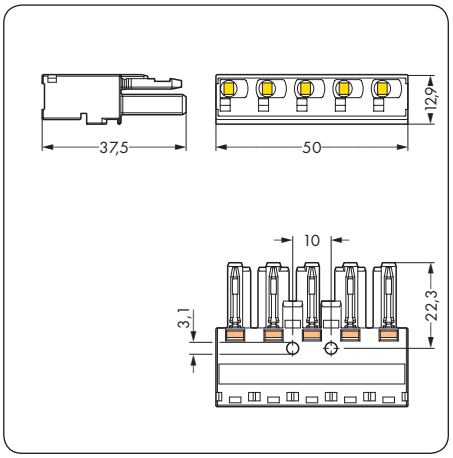

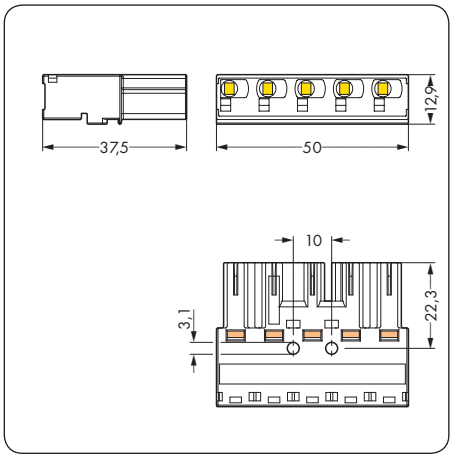

Locking lever, tool operated:
1.) Unlatch locking lever.
2.) Pull apart the connectors.
(Example shows 3-pole connector)

WINSTA® MIDI

Strain Relief Housings, 5 Poles, for Different Cable Diameters

	Snap-on type strain relief housing for - 5-pole sockets - 5-pole plugs ❶ Approvals	Snap-on type strain relief housing for - 5-pole sockets - 5-pole plugs ❶ Approvals

Description	Color	Item no.	Pack.-unit	Color	Item no.	Pack.-unit
Strain relief housings,	**Strain relief housings,**			**Strain relief housings,**		
5 poles	for 2 cables, diameter 5 - 9 mm / 0.19 - 0.35 in ❷			for 2 cables, diameter 9 - 13 mm / 0.35 - 0.51 in ❷		
	black	**770-505/023-000**	25	black	**770-505**	25
	white	**770-515/023-000**	25	white	**770-515**	25
Accessories						
Marker strips, self-adhesive, on DIN A 1 card, strip length 182 mm / 7.16 in	Height 6 mm / 0.23 in Size of the marker field 48 x 6.5 mm / 1.89 x 0.25 in	**210-333**	100	Height 6 mm / 0.23 in Size of the marker field 48 x 6.5 mm / 1.89 x 0.25 in	**210-333**	100

Info	Dimensions (in mm)

❶ Approval data can be found in the online catalog at www.wagocatalog.com

❷ For H05VV and NYM cables

Other cables on request

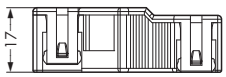

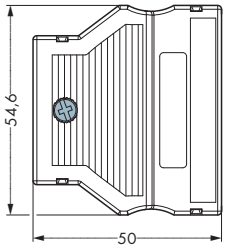

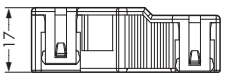

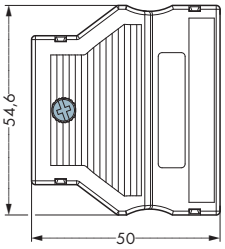

Snap-on type strain relief housing
for
- 5-pole sockets
- 5-pole plugs

❶ **Approvals**

Color	Item no.	Pack.-unit
Strain relief housings, for 4 mm²/AWG 12 cables,		
for 1 cable, diameter 11.5 - 16.5 mm / 0.45 - 0.65 in ❷		
black	**770-505/021-000**	25
white	**770-515/021-000**	25
Height 6 mm / 0.23 in	**210-333**	100
Size of the marker field 48 x 6.5 mm / 1.89 x 0.25 in		

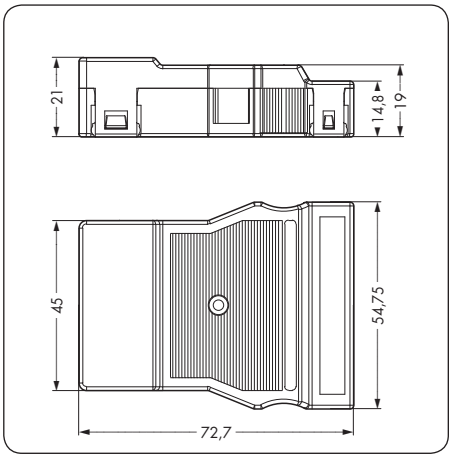

WINSTA® MIDI

Snap-In Sockets and Plugs, 5 Poles

	2 x 0.5 – 4 mm² ❶ 400 V/6 kV/3 25 A 9 mm / 0.35 in ❷ Approvals	2 x AWG 20 - 12

Description	Color	Item no.	Pack.-unit
Connectors, snap-in device connection, 5 poles, with CAGE CLAMP®S connection	**Sockets**		
	black	**770-705** ●	100
	white	**770-725** ○	100
	gray	**770-745** ●	100
	blue	**770-2105** ●	100
	red	**770-2305** ●	100
	For "Clean Earth" applications (up to 32 A)		
	green	**770-2325** ●	50

Accessories

Lockout caps, for cut-out	black	**770-645**	100
	white	**770-695**	100
Lockout caps, for socket, separable, 12 poles	black	**770-201**	100
	white	**770-221**	100
Coding pin, for plug			

Info	Dimensions (in mm)

❶ Wire range: 0.5 - 4 mm² "s + f-st"
0.5 - 2.5 mm² "stranded"

❷ Approval data can be found in the online catalog at www.wagocatalog.com

❸ Direct contact of the ground conductor on position PE1

● black	Coding A	(N ⏚ L1 L2 L3)
○ white	Coding A	(N ⏚ L1 L2 L3)
● gray	Coding B	(1 2 3 4 5)
● blue	Coding I	(N ⏚ L DA- DA+)
● red	Coding P	(N ⏚ L1 L2 L3)
● green	Coding Q	(N PE1 PE2 PE3 L)

Please find some information on the different codings on pages 146 and 147

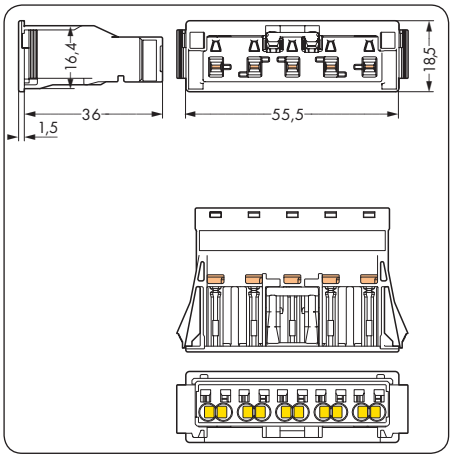

2 x 0.5 – 4 mm² ❶ 400 V/6 kV/3 25 A | 2 x AWG 20 - 12 9 mm / 0.35 in ❷ Approvals	2 x 0.5 – 4 mm² ❶ 400 V/6 kV/3 25 A | 2 x AWG 20 - 12 9 mm / 0.35 in ❷ Approvals

Color	Item no.	Pack.-unit	Color	Item no.	Pack.-unit
Plugs			**Plugs, with direct contacting of the ground conductor**		
black	**770-715**	100	black	**770-715/007-000**	100
white	**770-735**	100	white	**770-735/007-000**	100
gray	**770-755**	100			
blue	**770-2115**	100	blue	**770-2115/007-000**	100
red	**770-2315**	100			
For "Clean Earth" applications (up to 32 A)			For "Clean Earth" applications (up to 32 A)		
green	**770-2335**	50	green	**770-2335/007-000**	50 ❸
black	**770-645**	100	black	**770-645**	100
white	**770-695**	100	white	**770-695**	100
gray	**770-401**	100	gray	**770-401**	100

Direct contact of the earth conductor

Varnish-piercing direct contacting of the earth conductor. ❸

Lockout cap

Seal unused cutout with lockout cap.

Cut-out dimensions

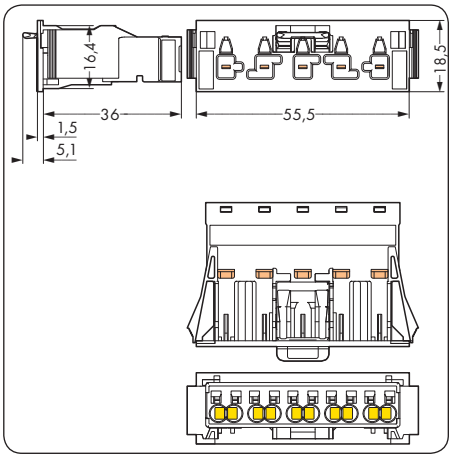

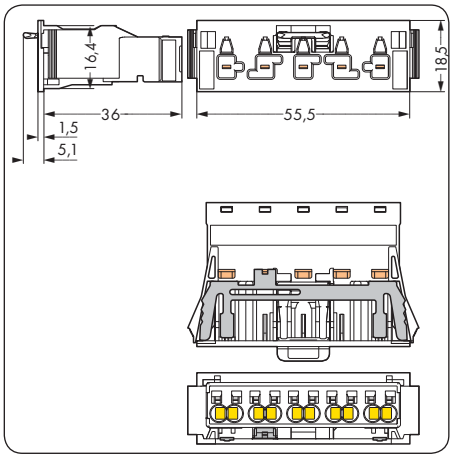

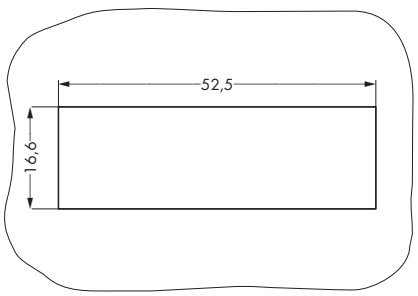

Panel thickness: 0.5 mm - 2 mm
Tolerance of the panel cutout: + 0.1 mm

WINSTA® MIDI

PCB Connectors, 5 Poles

	400 V/6 kV/3 25 A ❶ ❷ Approvals	400 V/6 kV/3 25 A ❶ ❷ Approvals

Description	Color	Item no.	Pack.-unit	Color	Item no.	Pack.-unit
PCB connectors, 5 poles	**Sockets,** straight type			**Plugs,** straight type		
2 solder pins per pole						
	black	**770-805** ●	50	black	**770-815** ●	50
	white	**770-825** ○	50	white	**770-835** ○	50
	gray	**770-845** ●	50	gray	**770-855** ●	50
	blue	**770-3105** ●	50	blue	**770-3115** ●	50
Accessories						
Lockout caps, for socket, separable, 12 poles	black	**770-201**	100			
	white	**770-221**	100			
Coding pin, for plug						
				gray	**770-401**	100

Info	Dimensions (in mm)

❶ Current load see table on page 65

❷ Approval data can be found in the online catalog at www.wagocatalog.com

● black	Coding A	(N ⏚ L1 L2 L3)
○ white	Coding A	(N ⏚ L1 L2 L3)
● gray	Coding B	(1 2 3 4 5)
● blue	Coding I	(N ⏚ L DA- DA+)

Please find some information on the different codings on pages 146 and 147

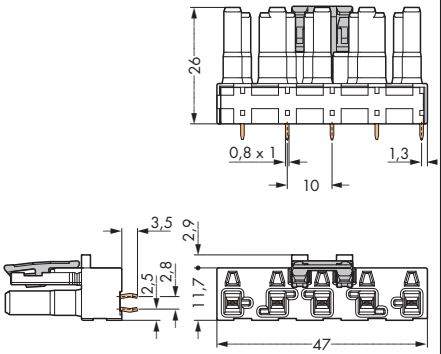

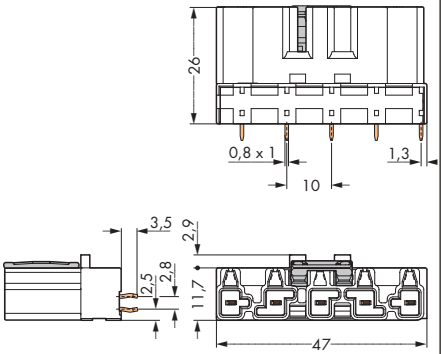

400 V/6 kV/3 25 A ❶ ❷ Approvals	400 V/6 kV/3 25 A ❶ ❷ Approvals

❶ **Depends on the PCB track dimensions**

Nominal current	Thickness of PCB track	Width of PCB track	Conductor cross section
16 A	70 µm one side	7 mm / 0.27 in	≙1.5 mm²/ AWG 16
20 A	70 µm one side	7 mm / 0.27 in	≙2.5 mm²/ AWG 14
25 A	105 µm both sides	7 mm / 0.27 in	≙ 4 mm²/ AWG 12

Color	Item no.	Pack.-unit	Color	Item no.	Pack.-unit
Sockets, angled type			**Plugs,** angled type		
black	**770-805/011-000** ●	50	black	**770-815/011-000** ●	50
white	**770-825/011-000** ○	50	white	**770-835/011-000** ○	50
gray	**770-845/011-000** ●	50	gray	**770-855/011-000** ●	50
blue	**770-3105/011-000** ●	50	blue	**770-3115/011-000** ●	50
black	**770-201**	100			
white	**770-221**	100			
			gray	**770-401**	100

Hole patterns

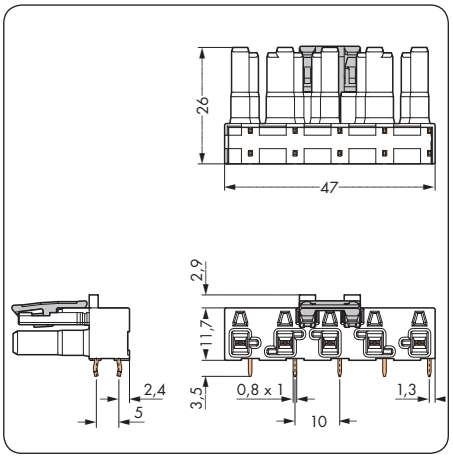

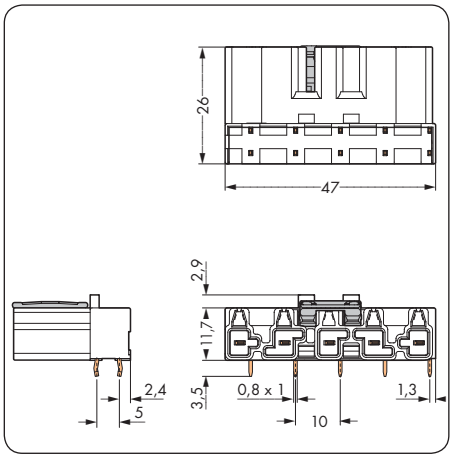

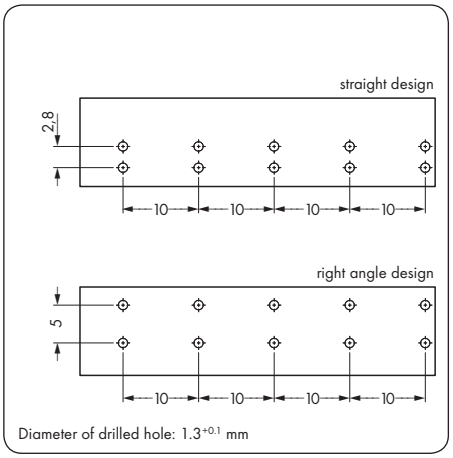

WINSTA® MIDI

Intermediate Couplers, 5 Poles

	400 V/6 kV/3 25 A ❶ Approvals	250 V/4 kV/3 400 V/6 kV/3 25 A ❶ Approvals

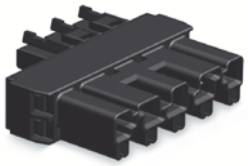

Description	Color	Item no.		Pack.-unit	Color	Item no.		Pack.-unit
Intermediate couplers, 5 poles	**Intermediate couplers, 1 x plug / 1 x socket**				**Intermediate couplers, 5 to 3 poles ❷**			
Intermediate couplers, 5 to 3 poles								
T-distribution connectors, 5 poles	black	**770-605**	●	100	L1 – L	**770-901**	●	100
Distribution connectors, 5 poles	white	**770-655**	○	100	L1 – L	**770-951**	○	100
	blue	**770-619**	●	100				
					L2 – L	**770-902**	●	100
					L2 – L	**770-952**	○	100
					L3 – L	**770-903**	●	100
					L3 – L	**770-953**	○	100
Accessories								
Mounting plates, for distribution connectors								
Fixing pin, for mounting plates, 6.1 x 2.5 - 4 mm / 0.24 x 0.098 - 0.157 in								
Lockout caps, for socket,								
separable, 12 poles	black	**770-201**		100	black	**770-201**		100
	white	**770-221**		100	white	**770-221**		100

Info	Dimensions (in mm)

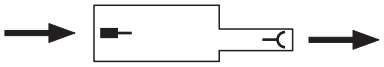

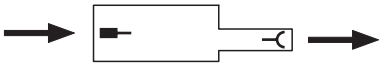

❶ Approval data can be found in the online catalog at www.wagocatalog.com

❷ One locking lever for each intermediate coupler included in the delivery

● black	Coding A	(N ⏚ L1 L2 L3)
○ white	Coding A	(N ⏚ L1 L2 L3)
● blue	Coding I	(N ⏚ L DA- DA+)

Please find some information on the different codings on pages 146 and 147

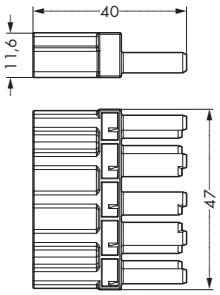

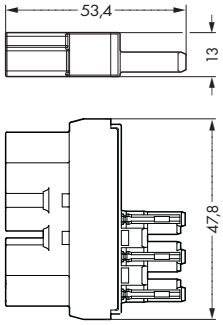

Distribution Connectors, 5 Poles

400 V/6 kV/3 25 A ❶ Approvals	400 V/6 kV/3 25 A ❶ Approvals

Color	Item no.	Pack.-unit	Color	Item no.	Pack.-unit
T-distribution connectors, 1 x plug / 2 x socket			**Distribution connectors, 3-way, 5 poles, 1 x plug / 3 x socket**		
black	**770-621** ●	50	black	**770-609** ●	25
white	**770-671** ○	50	white	**770-659** ○	25
blue	**770-617** ●	50			
for "flying leads", with 3rd locking lever					
black	**770-622** ●	50			
white	**770-672** ○	50			
blue	**770-620** ●	50			
			black	**770-625**	25
			white	**770-675**	25
			black	**770-601**	250
black	**770-201**	100	black	**770-201**	100
white	**770-221**	100	white	**770-221**	100

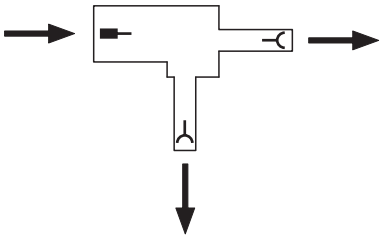

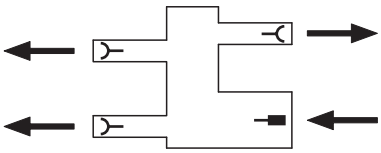

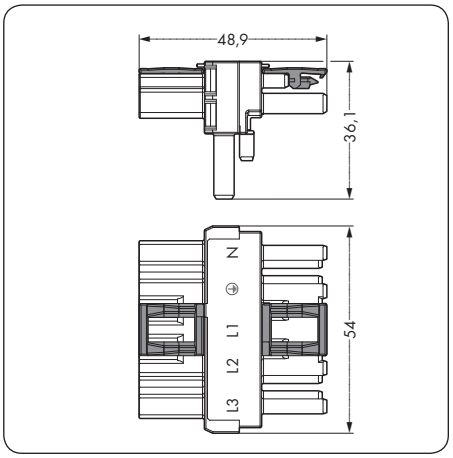

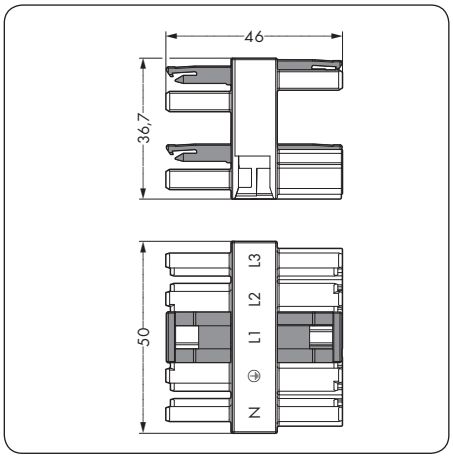

WINSTA® MIDI

Three-Phase to Single-Phase Distribution Connectors with Phase Selection, 5 Poles

250 V/4 kV/3
400 V/6 kV/3
25 A

❶ Approvals

Due to the diverse jumper positions, the user can choose from many different tapping options. The 3 fixed tap-offs (L1/L2/L3) as well as the freely selectable 4th tap-off provide for high flexibility before, during and after the installation.

Description	Color	Item no.	Pack.-unit
Three-phase to single-phase distribution connectors, 5 poles	**Three-phase to single-phase distribution connectors ❷**		
	black	**770-640** ●	10
	white	**770-690** ○	10
	red	**770-940** ●	10

Accessories

Mounting plates, for distribution connectors	black	**770-625**	25
	white	**770-675**	25
Fixing pin, for mounting plates, 6.1 x 2.5 - 4 mm / 0.24 x 0.098 - 0.157 in	black	**770-601**	250
Lockout caps, for socket, separable, 12 poles	black	**770-201**	100
	white	**770-221**	100

Info	Dimensions and internal circuit

❶ Approval data can be found in the online catalog at www.wagocatalog.com

❷ Jumper position on delivery L2

● black	Coding A	(N ⏚ L1 L2 L3)
○ white	Coding A	(N ⏚ L1 L2 L3)
● red	Coding P	(N ⏚ L1 L2 L3)

Please find some information on the different codings on pages 146 and 147

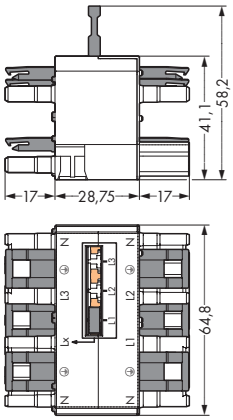

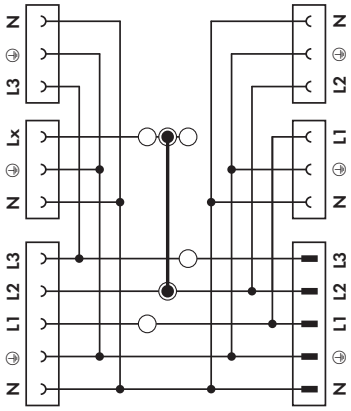

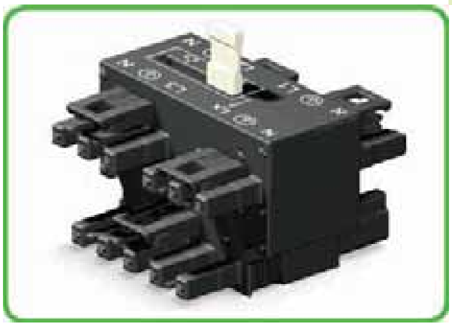

Movable jumper.

Jumper pushed down, flush with the housing (position L1).

An additional h-distribution connector doubles L1.
This results in the following connection options:
L1/L1/L2/L2/L3 with jumper in position L2
L1/L1/L2/L3/L3 with jumper in position L3

Use

Additional h-distribution connectors double L1 and L3.
This results in the following connection option:
L1/L1/L2/L2/L3/L3 with jumper in position L2
NOTICE: h-distribution connectors can only be plugged on L1 and L3!

WINSTA® MIDI

Distribution Connectors with Phase Selection

	0.5 – 4 mm² ❶ 250 V/4 kV/3 400 V/6 kV/3 25 A 9 mm / 0.35 in ❷ Approvals	AWG 20 - 12

Lift jumper out of delivery position (L2) using a screwdriver and move it into the desired position.

Push down jumper in its new position (picture shows L3).

The 5-pole energy circuit can be extended using pluggable cable assemblies.

Plugging a 3-pole tap-off cable.

Description	Color	Item no.		Pack.-unit
Distribution connectors with phase selection, with CAGE CLAMP®S connection,	**Distribution connectors with phase selection,**			
	with strain relief housing			
Tap-off: Socket, 3 poles, N ⏚ L	Cable diameter 9 - 13 mm / 0.35 - 0.51 in ❹			
Through contact: Socket, 5 poles, N ⏚ L1 L2 L3				
	black	**770-611**	●	10
	white	**770-661**	○	10

Accessories				
Mounting plates, for distribution connectors	black	**770-625**		25
	white	**770-675**		25
Fixing pin, for mounting plates, 6.1 x 2.5 - 4 mm / 0.24 x 0.098 - 0.157 in	black	**770-601**		250
Lockout caps, for socket, separable, 12 poles	black	**770-201**		100
	white	**770-221**		100

Info	Dimensions (in mm)

❶ Wire range: 0.5 - 4 mm² "s + f-st"
0.5 - 2.5 mm² "stranded"

❷ Approval data can be found in the online catalog at www.wagocatalog.com

❸ Marine approvals (GL, LR, NV) relate exclusively to cables approved for marine applications!

❹ More strain relief housings
see page 60

● black Coding A (N ⏚ L1 L2 L3)
○ white Coding A (N ⏚ L1 L2 L3)

Please find some information on the different codings on pages 146 and 147

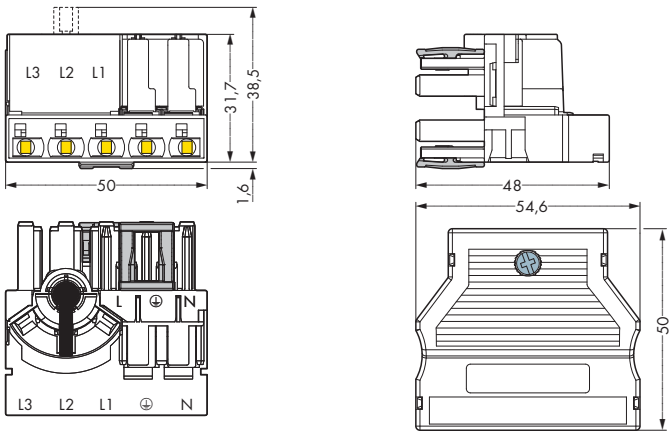

Cable Assemblies, 5 Poles

PVC H05VV-F 5G2.5
halogen-free H05Z1Z1-F 5G2.5
250 V/4 kV/3 20 A
400 V/6 kV/3 20 A

Wire ends bonded 9 mm/0.35 in
❷ ❸ Approvals

Distribution connectors with phase selection - free end

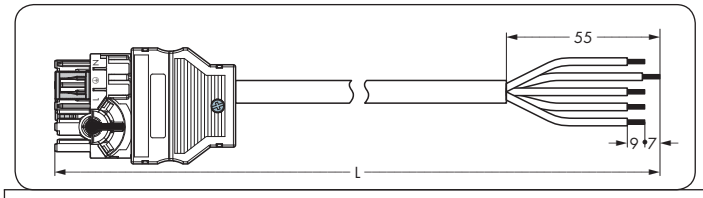

Length	Item no. black	Item no. white	Item no. black	Item no. white
	PVC		halogen-free	
1 m	771-8965/107-101	.../107-102	771-8965/117-101	.../117-102
2 m	771-8965/107-201	.../107-202	771-8965/117-201	.../117-202

Distribution connectors with phase selection - plug

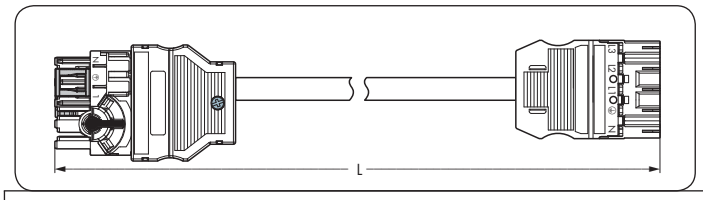

Length	Item no. black	Item no. white	Item no. black	Item no. white
	PVC		halogen-free	
1 m	771-8965/007-101	.../007-102	771-8965/017-101	.../017-102
2 m	771-8965/007-201	.../007-202	771-8965/017-201	.../017-202

Lengths	Pack.-unit
1 m	10
2 m	10
Other lengths on request	

Accessories

Locking levers, manually operated,

for "flying leads"		
black	**770-101**	100 (4 x 25)
white	**770-121**	100 (4 x 25)

Locking levers, tool operated,

for "flying leads"		
black	**770-111**	100 (4 x 25)
white	**770-131**	100 (4 x 25)

Lockout caps, for socket, separable, 12 poles

black	**770-201**	100
white	**770-221**	100

Coding pin, for plug

gray	**770-401**	100

WINSTA® MIDI

Cable Assemblies 5 x 1.5 mm²/AWG 16

PVC H05VV-F 5G1.5
halogen-free H05Z1Z1-F 5G1.5

400 V/6 kV/3 16 A

Wire ends bonded 9 mm/0.35 in
❶ Approvals

Interconnecting cables, socket - plug

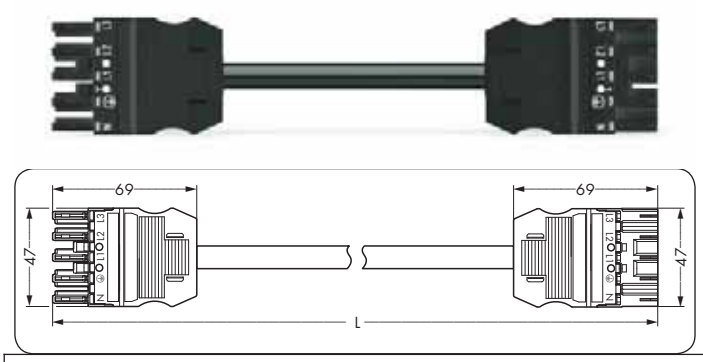

Length	Item no. black	Item no. white	Item no. black	Item no. white
Coding A ● ○				
	PVC		halogen-free	
1 m	771-9995/006-101	.../006-102	771-9995/016-101	.../016-102
2 m	771-9995/006-201	.../006-202	771-9995/016-201	.../016-202
3 m	771-9995/006-301	.../006-302	771-9995/016-301	.../016-302
4 m	771-9995/006-401	.../006-402	771-9995/016-401	.../016-402
5 m	771-9995/006-501	.../006-502	771-9995/016-501	.../016-502
6 m	771-9995/006-601	.../006-602	771-9995/016-601	.../016-602
7 m	771-9995/006-701	.../006-702	771-9995/016-701	.../016-702
8 m	771-9995/006-801	.../006-802	771-9995/016-801	.../016-802

Connecting cables, socket - free end

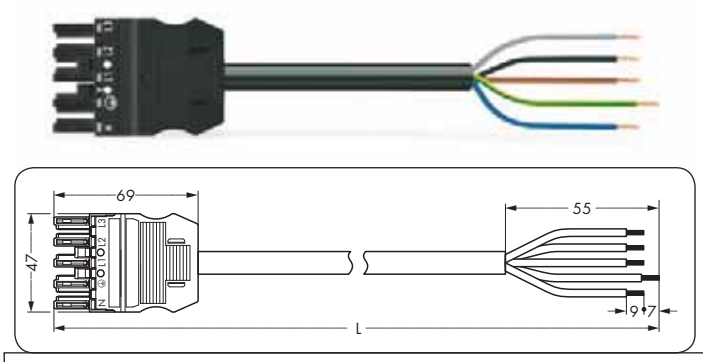

Length	Item no. black	Item no. white	Item no. black	Item no. white
Coding A ● ○				
	PVC		halogen-free	
1 m	771-9995/106-101	.../106-102	771-9995/116-101	.../116-102
2 m	771-9995/106-201	.../106-202	771-9995/116-201	.../116-202
3 m	771-9995/106-301	.../106-302	771-9995/116-301	.../116-302
4 m	771-9995/106-401	.../106-402	771-9995/116-401	.../116-402
5 m	771-9995/106-501	.../106-502	771-9995/116-501	.../116-502
6 m	771-9995/106-601	.../106-602	771-9995/116-601	.../116-602
7 m	771-9995/106-701	.../106-702	771-9995/116-701	.../116-702
8 m	771-9995/106-801	.../106-802	771-9995/116-801	.../116-802

Connecting cables, plug - free end

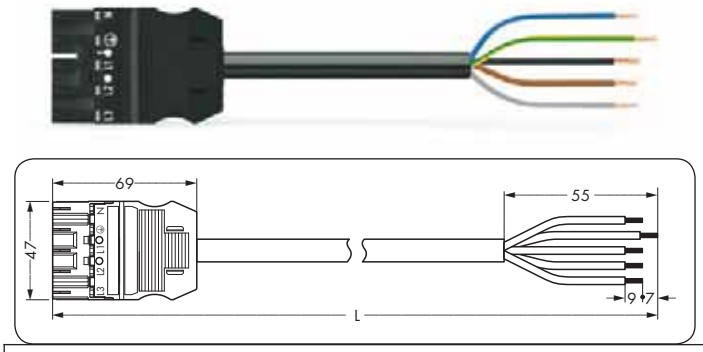

Length	Item no. black	Item no. white	Item no. black	Item no. white
Coding A ● ○				
	PVC		halogen-free	
1 m	771-9995/206-101	.../206-102	771-9995/216-101	.../216-102
2 m	771-9995/206-201	.../206-202	771-9995/216-201	.../216-202
3 m	771-9995/206-301	.../206-302	771-9995/216-301	.../216-302
4 m	771-9995/206-401	.../206-402	771-9995/216-401	.../216-402
5 m	771-9995/206-501	.../206-502	771-9995/216-501	.../216-502
6 m	771-9995/206-601	.../206-602	771-9995/216-601	.../216-602
7 m	771-9995/206-701	.../206-702	771-9995/216-701	.../216-702
8 m	771-9995/206-801	.../206-802	771-9995/216-801	.../216-802

Info

❶ Approval data can be found in the online catalog at www.wagocatalog.com
Marine approvals (GL, LR, NV) relate exclusively to cables approved for marine applications!

Other cables on request

● black	Coding A	(N ⏚ L1 L2 L3)
○ white	Coding A	(N ⏚ L1 L2 L3)
● blue	Coding I	(N ⏚ L DA- DA+)

Please find some information on the different codings on pages 146 and 147

Accessories

Locking levers, manually operated,

for "flying leads"

black	770-101	100 (4 x 25)
white	770-121	100 (4 x 25)

Locking levers, tool operated,

for "flying leads"

black	770-111	100 (4 x 25)
white	770-131	100 (4 x 25)

Lockout caps, for socket, separable, 12 poles

black	770-201	100
white	770-221	100

Coding pin, for plug

gray	770-401	100

	PVC H05VV-F 5G1.5 **halogen-free** H05Z1Z1-F 5G1.5 **400 V/6 kV/3 16 A** **Wire ends bonded 9 mm/0.35 in** **❶ Approvals**

Interconnecting cables, socket - plug

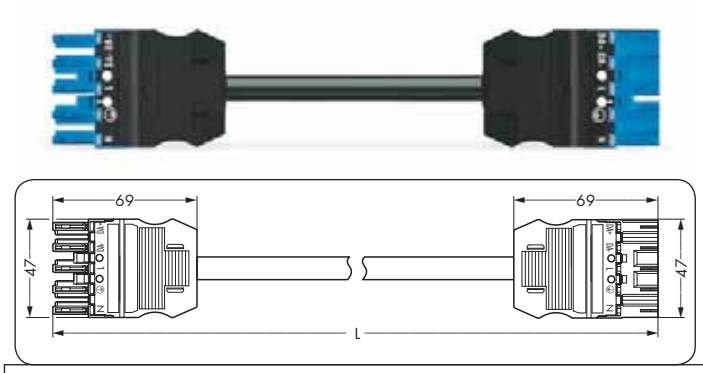

Coding I,
e.g., for dimming function (DALI)

Length	Item no. black PVC	Item no. black halogen-free
1 m	771-9985/006-101	771-9985/016-101
2 m	771-9985/006-201	771-9985/016-201
3 m	771-9985/006-301	771-9985/016-301
4 m	771-9985/006-401	771-9985/016-401
5 m	771-9985/006-501	771-9985/016-501
6 m	771-9985/006-601	771-9985/016-601
7 m	771-9985/006-701	771-9985/016-701
8 m	771-9985/006-801	771-9985/016-801

Connecting cables, socket - free end

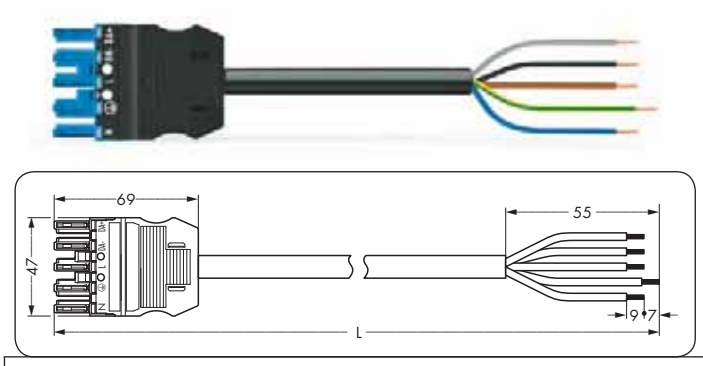

Coding I,
e.g., for dimming function (DALI)

Length	Item no. black PVC	Item no. black halogen-free
1 m	771-9985/106-101	771-9985/116-101
2 m	771-9985/106-201	771-9985/116-201
3 m	771-9985/106-301	771-9985/116-301
4 m	771-9985/106-401	771-9985/116-401
5 m	771-9985/106-501	771-9985/116-501
6 m	771-9985/106-601	771-9985/116-601
7 m	771-9985/106-701	771-9985/116-701
8 m	771-9985/106-801	771-9985/116-801

Connecting cables, plug - free end

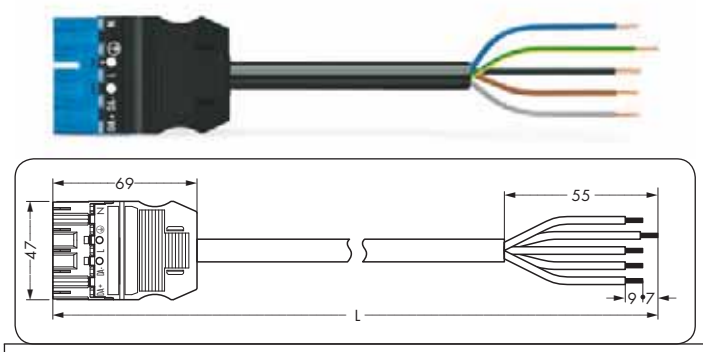

Coding I,
e.g., for dimming function (DALI)

Length	Item no. black PVC	Item no. black halogen-free
1 m	771-9985/206-101	771-9985/216-101
2 m	771-9985/206-201	771-9985/216-201
3 m	771-9985/206-301	771-9985/216-301
4 m	771-9985/206-401	771-9985/216-401
5 m	771-9985/206-501	771-9985/216-501
6 m	771-9985/206-601	771-9985/216-601
7 m	771-9985/206-701	771-9985/216-701
8 m	771-9985/206-801	771-9985/216-801

Lengths	Pack.-unit
1 m	50
2, 3, 4 m	25
5, 6 m	15
7, 8 m	10
Other lengths on request	

Accessories

Locking levers, manually operated,
for "flying leads"

black	**770-101**	100 (4 x 25)
white	**770-121**	100 (4 x 25)

Locking levers, tool operated,
for "flying leads"

black	**770-111**	100 (4 x 25)
white	**770-131**	100 (4 x 25)

Lockout caps, for socket, separable, 12 poles

black	**770-201**	100
white	**770-221**	100

Coding pin, for plug

gray	**770-401**	100

WINSTA® MIDI

Cable Assemblies 5 x 1.5 mm²/AWG 16

PVC H05VV-F 5G1.5
halogen-free H05Z1Z1-F 5G1.5

400 V/6 kV/3 16 A

Wire ends bonded 9 mm/0.35 in
❶ Approvals

Interconnecting cables, socket - plug

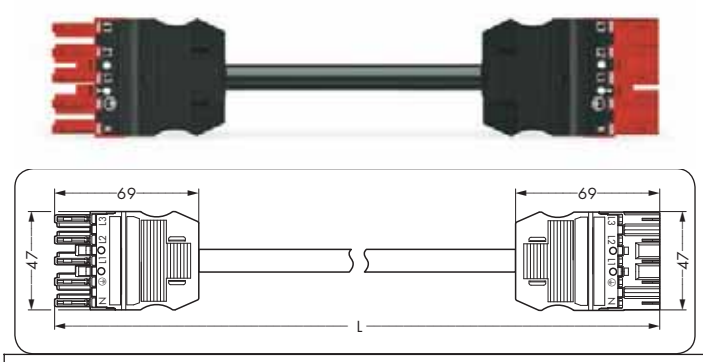

Coding P

Length	Item no. black (PVC)	Item no. black (halogen-free)
1 m	771-9975/006-101	771-9975/016-101
2 m	771-9975/006-201	771-9975/016-201
3 m	771-9975/006-301	771-9975/016-301
4 m	771-9975/006-401	771-9975/016-401
5 m	771-9975/006-501	771-9975/016-501
6 m	771-9975/006-601	771-9975/016-601
7 m	771-9975/006-701	771-9975/016-701
8 m	771-9975/006-801	771-9975/016-801

Connecting cables, socket - free end

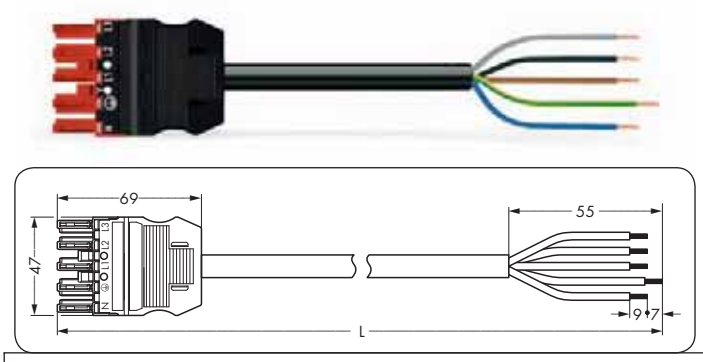

Coding P

Length	Item no. black (PVC)	Item no. black (halogen-free)
1 m	771-9975/106-101	771-9975/116-101
2 m	771-9975/106-201	771-9975/116-201
3 m	771-9975/106-301	771-9975/116-301
4 m	771-9975/106-401	771-9975/116-401
5 m	771-9975/106-501	771-9975/116-501
6 m	771-9975/106-601	771-9975/116-601
7 m	771-9975/106-701	771-9975/116-701
8 m	771-9975/106-801	771-9975/116-801

Connecting cables, plug - free end

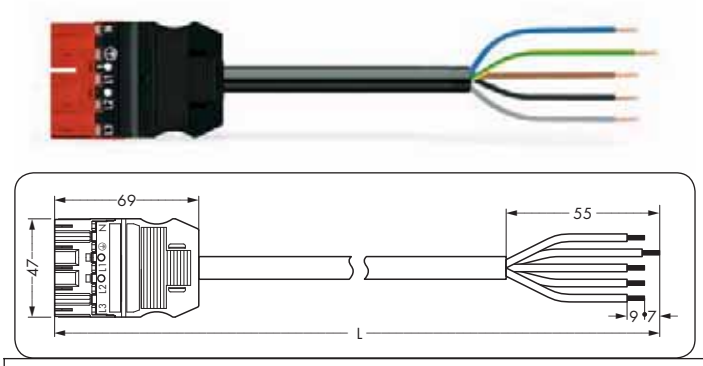

Coding P

Length	Item no. black (PVC)	Item no. black (halogen-free)
1 m	771-9975/206-101	771-9975/216-101
2 m	771-9975/206-201	771-9975/216-201
3 m	771-9975/206-301	771-9975/216-301
4 m	771-9975/206-401	771-9975/216-401
5 m	771-9975/206-501	771-9975/216-501
6 m	771-9975/206-601	771-9975/216-601
7 m	771-9975/206-701	771-9975/216-701
8 m	771-9975/206-801	771-9975/216-801

Info

❶ Approval data can be found in the online catalog at www.wagocatalog.com

Other cables on request

● black	Coding A	(N ⏚ L1 L2 L3)
○ white	Coding A	(N ⏚ L1 L2 L3)
● red	Coding P	(N ⏚ L1 L2 L3)

Please find some information on the different codings on pages 146 and 147

Accessories

Locking levers, manually operated,

for "flying leads"

black	770-101	100 (4 x 25)
white	770-121	100 (4 x 25)

Locking levers, tool operated,

for "flying leads"

black	770-111	100 (4 x 25)
white	770-131	100 (4 x 25)

Lockout caps, for socket, separable, 12 poles

black	770-201	100
white	770-221	100

Coding pin, for plug

gray	770-401	100

Cable Assemblies 5 x 2.5 mm²/AWG 14

PVC H05VV-F 5G2.5
halogen-free H05Z1Z1-F 5G2.5

400 V/6 kV/3 20 A

Wire ends bonded 9 mm/0.35 in
❶ Approvals

Interconnecting cables, socket - plug

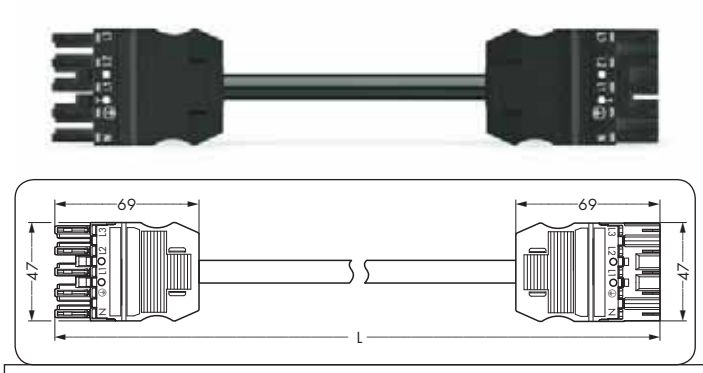

Length	Item no. black	Item no. white	Item no. black	Item no. white
Coding A ● ○				
	PVC		halogen-free	
1 m	771-9995/007-101	.../007-102	771-9995/017-101	.../017-102
2 m	771-9995/007-201	.../007-202	771-9995/017-201	.../017-202
3 m	771-9995/007-301	.../007-302	771-9995/017-301	.../017-302
4 m	771-9995/007-401	.../007-402	771-9995/017-401	.../017-402
5 m	771-9995/007-501	.../007-502	771-9995/017-501	.../017-502
6 m	771-9995/007-601	.../007-602	771-9995/017-601	.../017-602
7 m	771-9995/007-701	.../007-702	771-9995/017-701	.../017-702
8 m	771-9995/007-801	.../007-802	771-9995/017-801	.../017-802

Connecting cables, socket - free end

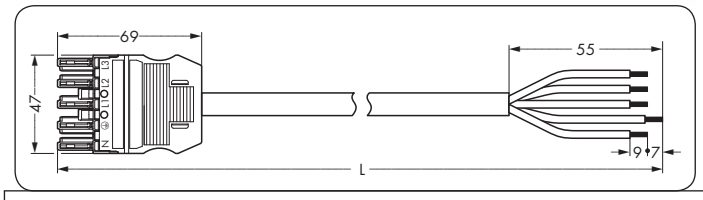

Length	Item no. black	Item no. white	Item no. black	Item no. white
Coding A ● ○				
	PVC		halogen-free	
1 m	771-9995/107-101	.../107-102	771-9995/117-101	.../117-102
2 m	771-9995/107-201	.../107-202	771-9995/117-201	.../117-202
3 m	771-9995/107-301	.../107-302	771-9995/117-301	.../117-302
4 m	771-9995/107-401	.../107-402	771-9995/117-401	.../117-402
5 m	771-9995/107-501	.../107-502	771-9995/117-501	.../117-502
6 m	771-9995/107-601	.../107-602	771-9995/117-601	.../117-602
7 m	771-9995/107-701	.../107-702	771-9995/117-701	.../117-702
8 m	771-9995/107-801	.../107-802	771-9995/117-801	.../117-802

Connecting cables, plug - free end

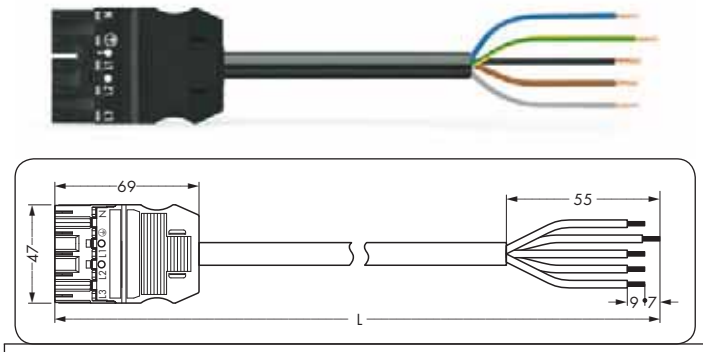

Length	Item no. black	Item no. white	Item no. black	Item no. white
Coding A ● ○				
	PVC		halogen-free	
1 m	771-9995/207-101	.../207-102	771-9995/217-101	.../217-102
2 m	771-9995/207-201	.../207-202	771-9995/217-201	.../217-202
3 m	771-9995/207-301	.../207-302	771-9995/217-301	.../217-302
4 m	771-9995/207-401	.../207-402	771-9995/217-401	.../217-402
5 m	771-9995/207-501	.../207-502	771-9995/217-501	.../217-502
6 m	771-9995/207-601	.../207-602	771-9995/217-601	.../217-602
7 m	771-9995/207-701	.../207-702	771-9995/217-701	.../217-702
8 m	771-9995/207-801	.../207-802	771-9995/217-801	.../217-802

Lengths	Pack.-unit
1 m	50
2, 3, 4 m	25
5, 6 m	15
7, 8 m	10

Other lengths on request

Accessories

Locking levers, manually operated,

	for "flying leads"	
black	**770-101**	100 (4 x 25)
white	**770-121**	100 (4 x 25)

Locking levers, tool operated,

	for "flying leads"	
black	**770-111**	100 (4 x 25)
white	**770-131**	100 (4 x 25)

Lockout caps, for socket, separable, 12 poles

black	**770-201**	100
white	**770-221**	100

Coding pin, for plug

gray	**770-401**	100

WINSTA® MIDI

Cable Assemblies 5 x 2.5 mm²/AWG 14

PVC H05VV-F 5G2.5
halogen-free H05Z1Z1-F 5G2.5

400 V/6 kV/3 20 A

Wire ends bonded 9 mm/0.35 in
❶ Approvals

Interconnecting cables, socket - plug

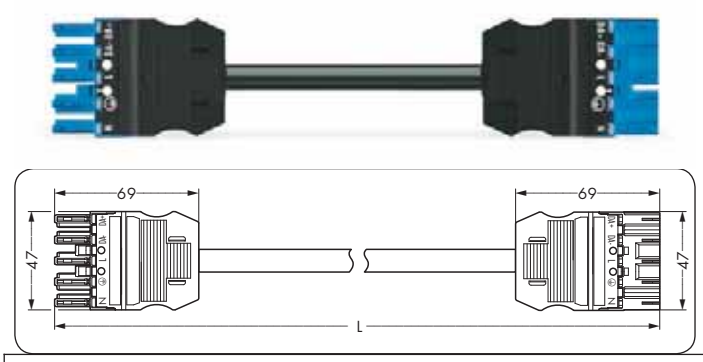

Coding I, blue
e.g., for dimming function (DALI)

Length	Item no. black PVC	Item no. black halogen-free
1 m	771-9985/007-101	771-9985/017-101
2 m	771-9985/007-201	771-9985/017-201
3 m	771-9985/007-301	771-9985/017-301
4 m	771-9985/007-401	771-9985/017-401
5 m	771-9985/007-501	771-9985/017-501
6 m	771-9985/007-601	771-9985/017-601
7 m	771-9985/007-701	771-9985/017-701
8 m	771-9985/007-801	771-9985/017-801

Connecting cables, socket - free end

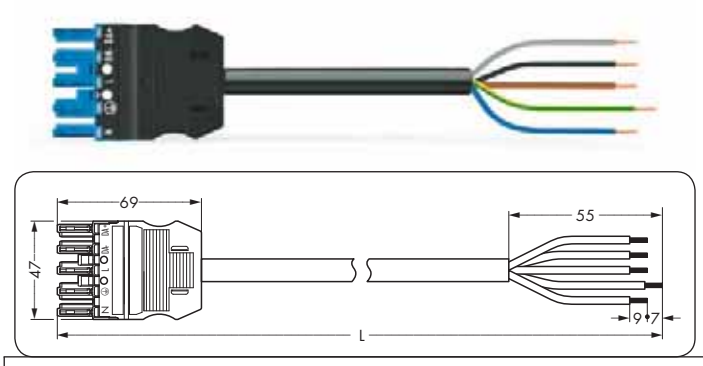

Coding I, blue
e.g., for dimming function (DALI)

Length	Item no. black PVC	Item no. black halogen-free
1 m	771-9985/107-101	771-9985/117-101
2 m	771-9985/107-201	771-9985/117-201
3 m	771-9985/107-301	771-9985/117-301
4 m	771-9985/107-401	771-9985/117-401
5 m	771-9985/107-501	771-9985/117-501
6 m	771-9985/107-601	771-9985/117-601
7 m	771-9985/107-701	771-9985/117-701
8 m	771-9985/107-801	771-9985/117-801

Connecting cables, plug - free end

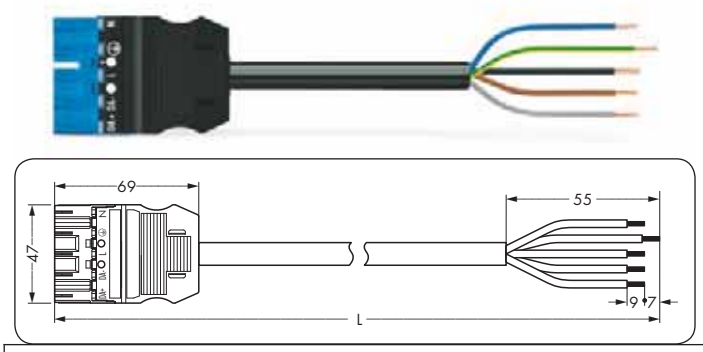

Coding I, blue
e.g., for dimming function (DALI)

Length	Item no. black PVC	Item no. black halogen-free
1 m	771-9985/207-101	771-9985/217-101
2 m	771-9985/207-201	771-9985/217-201
3 m	771-9985/207-301	771-9985/217-301
4 m	771-9985/207-401	771-9985/217-401
5 m	771-9985/207-501	771-9985/217-501
6 m	771-9985/207-601	771-9985/217-601
7 m	771-9985/207-701	771-9985/217-701
8 m	771-9985/207-801	771-9985/217-801

Info

❶ Approval data can be found in the online catalog at www.wagocatalog.com

Other cables on request

blue Coding I (N ⏚ L DA- DA+)
red Coding P (N ⏚ L1 L2 L3)

Please find some information on the different codings on pages 146 and 147

Accessories

Locking levers, manually operated,

for "flying leads"		
black	770-101	100 (4 x 25)
white	770-121	100 (4 x 25)

Locking levers, tool operated,

for "flying leads"		
black	770-111	100 (4 x 25)
white	770-131	100 (4 x 25)

Lockout caps, for socket, separable, 12 poles

black	770-201	100
white	770-221	100

Coding pin, for plug

gray	770-401	100

PVC H05VV-F 5G2.5
halogen-free H05Z1Z1-F 5G2.5

400 V/6 kV/3 20 A

Wire ends bonded 9 mm/0.35 in
❶ Approvals

Interconnecting cables, socket - plug

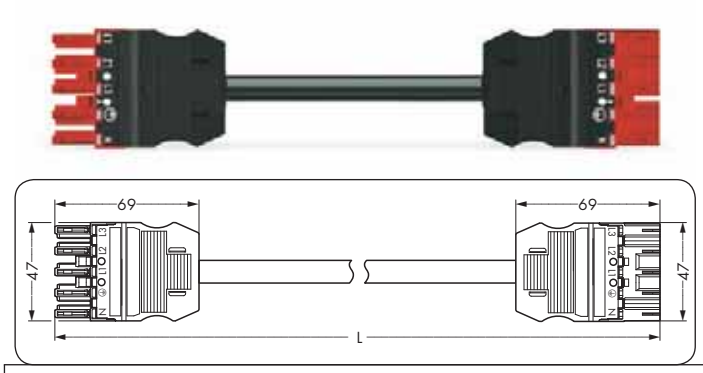

Length	Item no. black	Item no. black
Coding P		
	PVC	halogen-free
1 m	771-9975/007-101	771-9975/017-101
2 m	771-9975/007-201	771-9975/017-201
3 m	771-9975/007-301	771-9975/017-301
4 m	771-9975/007-401	771-9975/017-401
5 m	771-9975/007-501	771-9975/017-501
6 m	771-9975/007-601	771-9975/017-601
7 m	771-9975/007-701	771-9975/017-701
8 m	771-9975/007-801	771-9975/017-801

Connecting cables, socket - free end

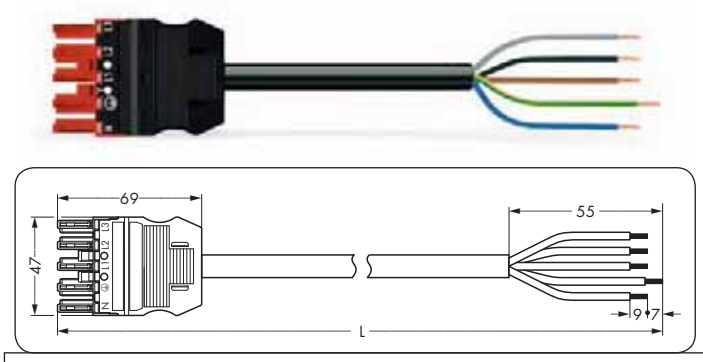

Length	Item no. black	Item no. black
Coding P		
	PVC	halogen-free
1 m	771-9975/107-101	771-9975/117-101
2 m	771-9975/107-201	771-9975/117-201
3 m	771-9975/107-301	771-9975/117-301
4 m	771-9975/107-401	771-9975/117-401
5 m	771-9975/107-501	771-9975/117-501
6 m	771-9975/107-601	771-9975/117-601
7 m	771-9975/107-701	771-9975/117-701
8 m	771-9975/107-801	771-9975/117-801

Connecting cables, plug - free end

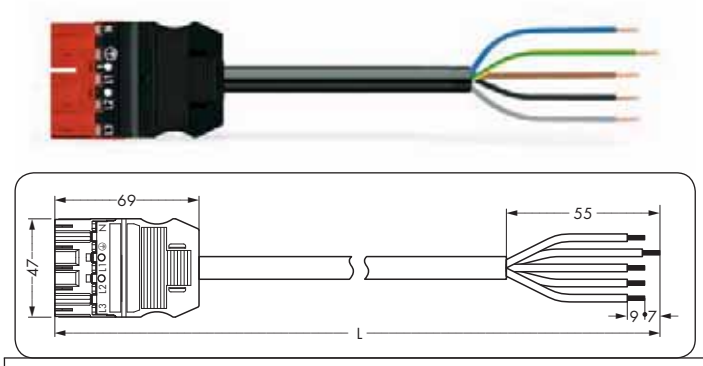

Length	Item no. black	Item no. black
Coding P		
	PVC	halogen-free
1 m	771-9975/207-101	771-9975/217-101
2 m	771-9975/207-201	771-9975/217-201
3 m	771-9975/207-301	771-9975/217-301
4 m	771-9975/207-401	771-9975/217-401
5 m	771-9975/207-501	771-9975/217-501
6 m	771-9975/207-601	771-9975/217-601
7 m	771-9975/207-701	771-9975/217-701
8 m	771-9975/207-801	771-9975/217-801

Lengths	Pack.-unit
1 m	50
2, 3, 4 m	25
5, 6 m	15
7, 8 m	10
Other lengths on request	

Accessories

Locking levers, manually operated,

for "flying leads"		
black	**770-101**	100 (4 x 25)
white	**770-121**	100 (4 x 25)

Locking levers, tool operated,

for "flying leads"		
black	**770-111**	100 (4 x 25)
white	**770-131**	100 (4 x 25)

Lockout caps, for socket, separable, 12 poles

black	**770-201**	100
white	**770-221**	100

Coding pin, for plug

gray	**770-401**	100

WINSTA® MIDI

Distribution Box

Distribution box, wired **Different versions see page 79**	**4-channel radio receiver** **with 4 make contacts** **2-channel radio receiver** **with outputs for blind control**	**Technical data**

Description	Color	Item no.	Pack.-unit
Radio receivers	**4-channel radio receiver**		
	black	**770-629/101-000**	1
	2-channel radio receiver		
	black	**770-629/102-000**	1

Technical data	
Voltage supply	AC 230 V, 50 - 60 Hz
Voltage range	± 10 %
Current consumption	max. 21 mA
(internal)	16 A (4-channel)
Max. total current	max. 8 A (2-channel)
	max. 120 A (4-channel)
Max. make current	25 A (2-channel)
Switching frequency	max. 5 Hz
Isolation	Internal voltage supply, electrically isolated
Fuse protection	external, 16 A
Ambient operating temperature	0°C ... + 55°C
Type of mounting	Screw fixing
Degree of protection	IP 20
Fitting position	any
Standards/specifications	Vibration and shock resistance according to IEC 60068-2-6 and IEC 60068-2-27

Accessories

RF magnetic antenna, with SMA plug, incl. 2.5m connecting cable

black	**758-910**	1

Block diagrams

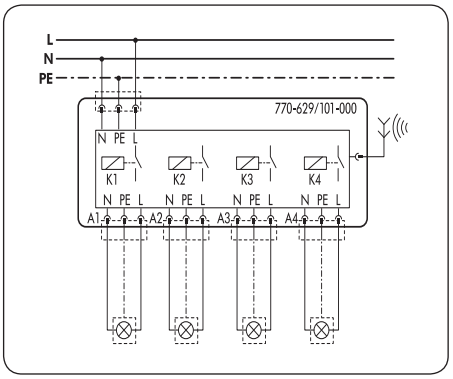

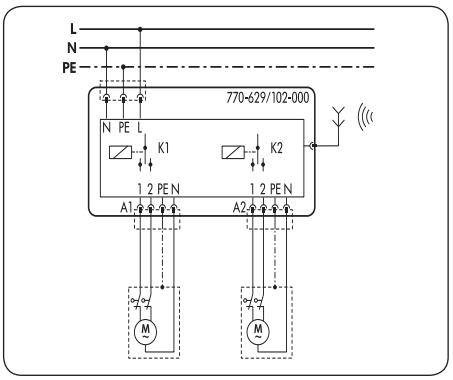

Info

Please find additional information at www.wago.com

Dimensions (in mm)

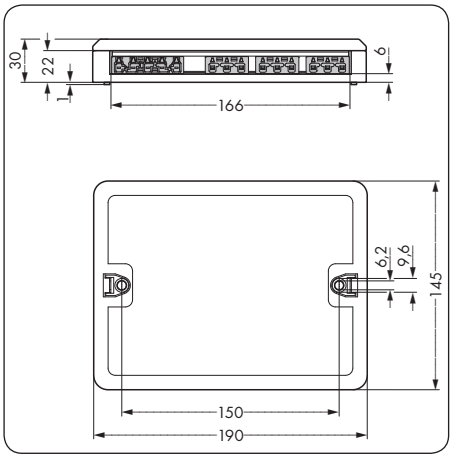

Distribution Boxes, Wired

Internal wiring 4 mm²/AWG 12 400 V / 6 kV / 3 5 poles 250 V / 4 kV / 3 3 poles 25 A	Internal wiring 4 mm²/AWG 12 400 V / 6 kV / 3 5 poles 250 V / 4 kV / 3 3 poles 25 A	Internal wiring 2.5 mm² (AWG 14) / 4 mm² (AWG 12) 400 V / 6 kV / 3 5 poles 250 V / 4 kV / 3 3 poles max. 25 A, depends on the built-in appliance

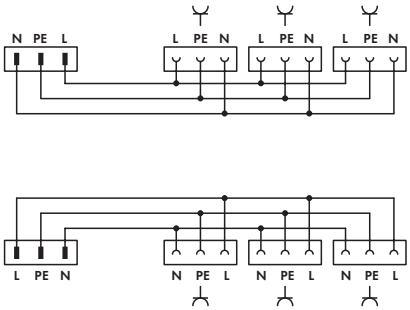

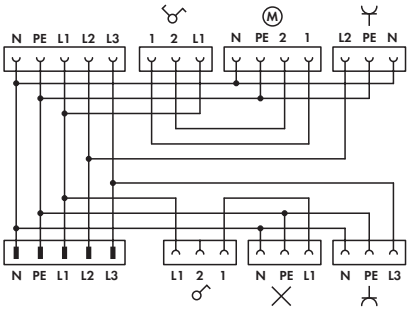

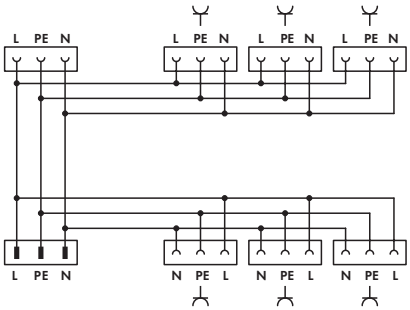

Color	Item no.	Pack.-unit	Color	Item no.	Pack.-unit	Color	Item no.	Pack.-unit
Distribution boxes, separate circuits			Distribution boxes, blind control, single-pole switch and distribution			Distribution boxes, 1-phase distribution		
black	770-631/106-000	1	black	770-631/107-000	1	black	770-631/104-000	1
white	770-681/106-000	1	white	770-681/107-000	1	white	770-681/104-000	1

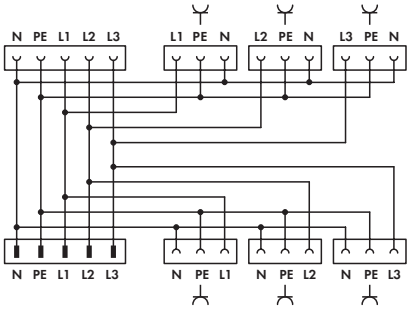

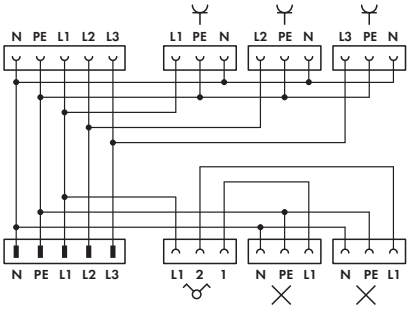

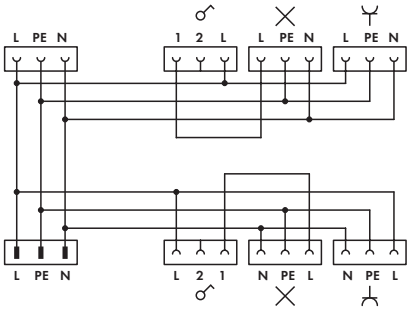

Color	Item no.	Pack.-unit	Color	Item no.	Pack.-unit	Color	Item no.	Pack.-unit
Distribution boxes, 3-phase/1-phase distribution			Distribution boxes, series circuits and distribution			Distribution boxes, single-pole switch and distribution		
black	770-631/100-000	1	black	770-631/109-000	1	black	770-631/110-000	1
white	770-681/100-000	1	white	770-681/109-000	1	white	770-681/110-000	1

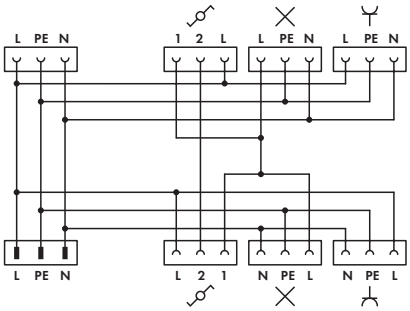

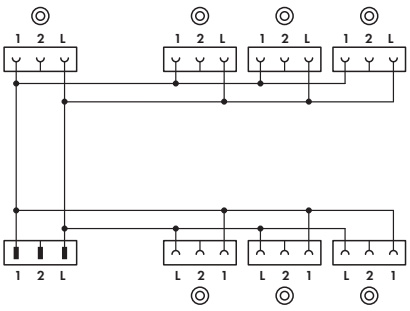

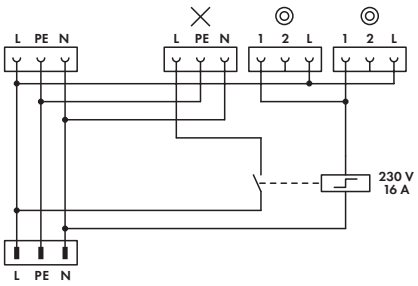

Color	Item no.	Pack.-unit	Color	Item no.	Pack.-unit	Color	Item no.	Pack.-unit
Distribution boxes, two-way circuit and distribution			Distribution boxes, push button version			Distribution boxes, surge switch circuit		
black	770-631/111-000	1	black	770-631/112-000	1	black	770-632/138-000	1
white	770-681/111-000	1	white	770-681/112-000	1	white	770-682/138-000	1

Other circuits available upon request

WINSTA® MIDI

Strain Relief Housings, 6 Poles

Snap-on type strain relief housings for
- **two 3-pole sockets**
- **two 3-pole plugs**
- **3-pole socket and 3-pole plug**

Application example of a 6-pole connector.

Description	Color	Item no.	Pack.-unit
Strain relief housings	**Strain relief housings,**		
	for 2 cables, diameter 8.5 - 13,5 mm / 0.33 - 0.53 in ❶		
	black	**770-506/029-000**	50
	white	**770-516/029-000**	50

Accessories

Marker strips, self-adhesive, on DIN A 1 card, strip length 182 mm / 7.16 in	6 mm /0.23 in high	**210-333**	100
	Size of the marker field 62 x 6.5 mm / 2.44 x 0.25 in		

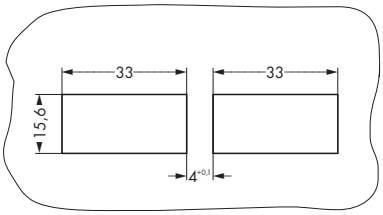

Panel thickness: 0.5 mm - 2 mm
Tolerance of the panel cutout: + 0.1 mm

If the 6-pole strain relief housing is used with snap-in connectors, the sheet cutouts have to be made as described above.

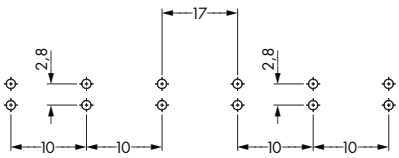

When using a 6-pole PCB connector, straight type, observe the above hole patterns.

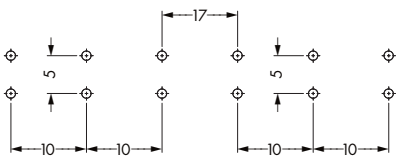

When using a 6-pole PCB connector, angled type, observe the above hole patterns.

Info

❶ **For H05VV and NYM cables**
Other cables on request

Dimensions (in mm)

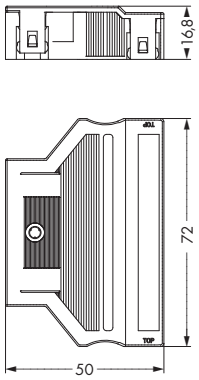

Strain Relief Housings, 7 Poles

	Snap-on type strain relief housing for 3-pole socket or plug as well as 4-pole socket or plug

Application example of a 7-pole connector.

Description	Color	Item no.	Pack.-unit
Strain relief housings	**Strain relief housings,** for 1 cable, diameter 8 - 15 mm / 0.31 - 0.59 in ❶		
	black	**770-507/047-000**	50
	white	**770-517/047-000**	50

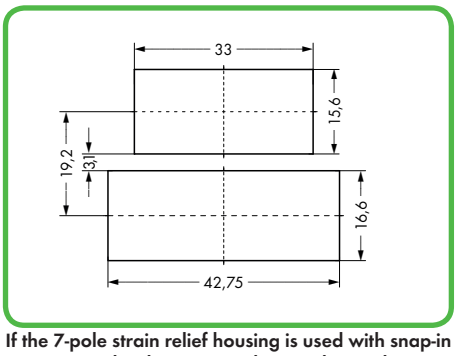

If the 7-pole strain relief housing is used with snap-in connectors, the sheet cutouts have to be made as described above.

"Flying leads"
(NOTICE: Only use locking levers on upper position!)

	Dimensions (in mm)

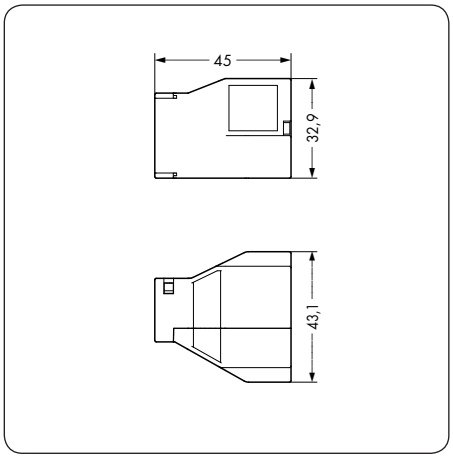

"Flying leads"

WINSTA® MAXI 831 Series up to 6 mm² (AWG 12) / 32 A

3

831 Series
Socket, 5 poles 84
Plug, 5 poles 84

Handling *WINSTA®* MAXI 831 Series

Preparation

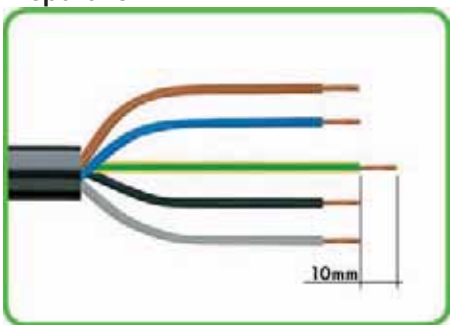

The following lengths are recommended:
1. Strip length, outer insulation = 80 mm/3.15 in
2. Strip length = 13 mm/0.51 in
3. PE conductor protruding = 10 mm/0.32 in

Actuate the clamp using a screwdriver (blade width 5.5) to connect flexible conductors and insert the stripped conductor up to the stop.

Strain relief mounting

Unscrew strain relief from the lower part of the housing . . .

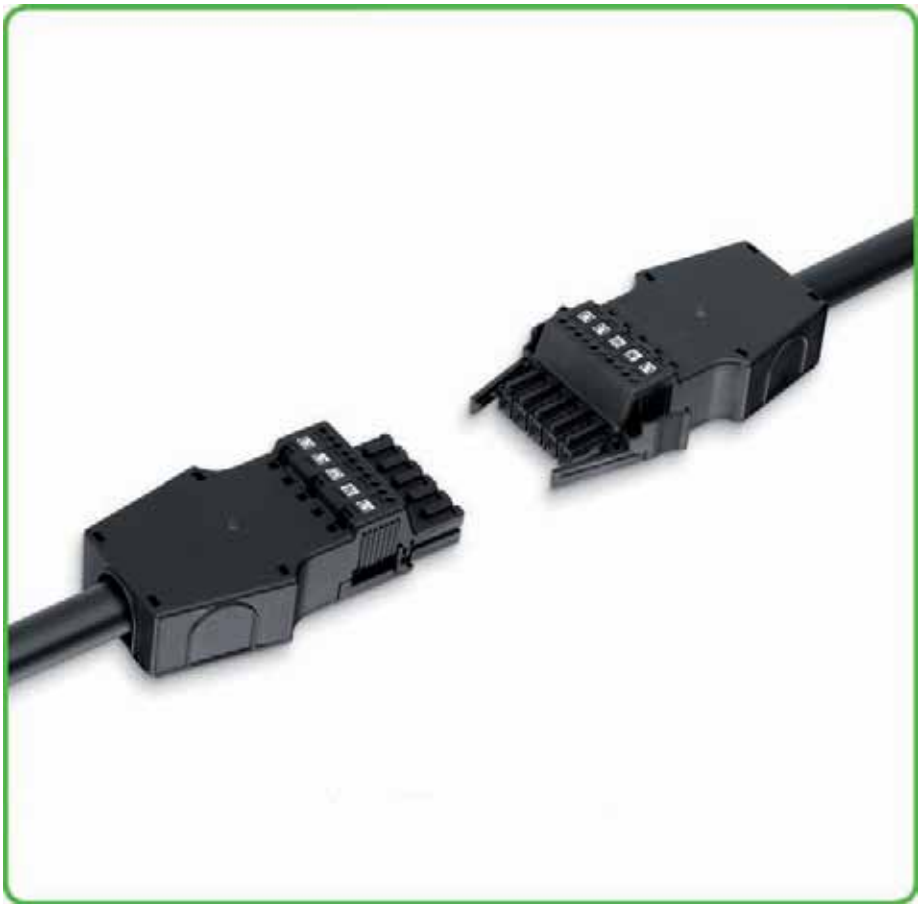

. . . and snap wired connector onto the lower part.

Tighten strain relief with screwdriver.

Strain relief mounting

Wired connector with lower part of the strain relief housing.

Latch the top of the strain relief housing.

Marking

The printed marking of the connector is clearly visible in the opening of the strain relief housing.

WINSTA® MAXI Sockets and Plugs, 5 Poles

	0.5 – 6 mm² ❶ 400 V/6 kV/3 32 A | AWG 20 - 10 13 mm / 0.51 in ❷ Approvals	0.5 – 6 mm² ❶ 400 V/6 kV/3 32 A | AWG 20 - 10 13 mm / 0.51 in ❷ Approvals

Description	Color	Item no.	Pack.-unit	Color	Item no.	Pack.-unit
Connectors, 5 poles, with CAGE CLAMP®S connection	Socket with strain relief housing and locking levers, for 1 cable, diameter 13 - 18 mm / 0.51 - 0.70 in ❸			Plug with strain relief housing, for 1 cable, diameter 13 - 18 mm / 0.51 - 0.70 in ❸		
	black	831-3105/019-004●	5	black	831-3205/020-004●	5
	white	831-3105/019-050○	5	white	831-3205/020-050○	5

Info

❶ Wire range: 0.5 - 6 mm² "s + f-st"
0.5 - 4 mm² "stranded"

❷ Approval data can be found in the online catalog at www.wagocatalog.com

❸ For H05VV and NYM cables
Other cables on request

● black Coding A (L1 N ⏚ L2 L3)
○ white Coding A (L1 N ⏚ L2 L3)

Please find some information on the different codings on the pages 146 and 147

Dimensions (in mm)

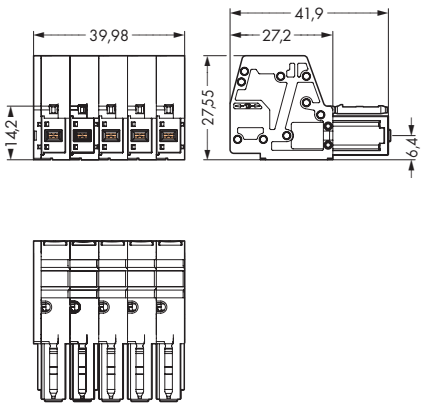

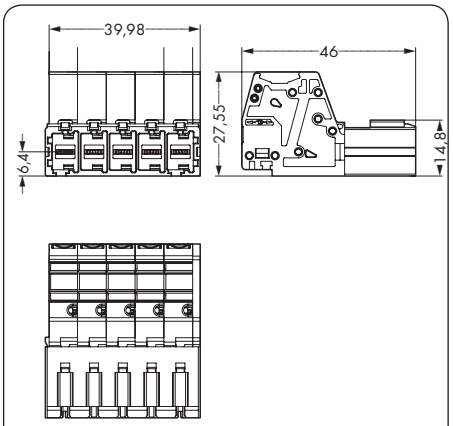

WINSTA® MAXI

for Use in Distribution Boxes
(custom versions on request)

WINSTA® RD

774 Series up to 2.5 mm² (AWG 14) / 20 A

4

774 Series
Cable Assemblies 3 x 1.5 mm²/AWG 16 88
Cable Assemblies 3 x 2.5 mm²/AWG 14 89

774 Series
Cable Assemblies 4 x 1.5 mm²/AWG 16 90

***WINSTA®*- The perfect connection!**

WINSTA® RD

Cable Assemblies 3 x 1.5 mm²/AWG 16

PVC H05VV-F 3G1.5
halogen-free H05Z1Z1-F 3G1.5

250 V/4 kV/3 16 A

Wire ends bonded 9 mm / 0.35 in
❶ Approvals

Interconnecting cables, socket with LL ❷ - plug

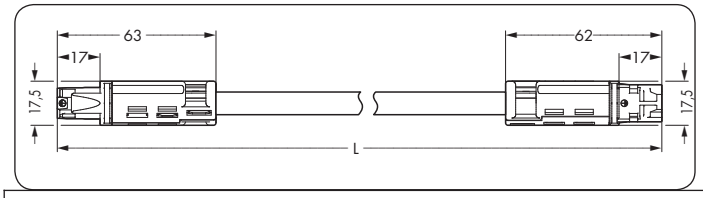

Length	Item no. black	Item no. white	Item no. black	Item no. white
Coding A ● ○				
	PVC		halogen-free	
1 m	774-9993/006-101	.../006-102	774-9993/016-101	.../016-102
2 m	774-9993/006-201	.../006-202	774-9993/016-201	.../016-202
3 m	774-9993/006-301	.../006-302	774-9993/016-301	.../016-302
4 m	774-9993/006-401	.../006-402	774-9993/016-401	.../016-402
5 m	774-9993/006-501	.../006-502	774-9993/016-501	.../016-502
6 m	774-9993/006-601	.../006-602	774-9993/016-601	.../016-602
7 m	774-9993/006-701	.../006-702	774-9993/016-701	.../016-702
8 m	774-9993/006-801	.../006-802	774-9993/016-801	.../016-802

Connecting cables, socket with LL ❷ - free end

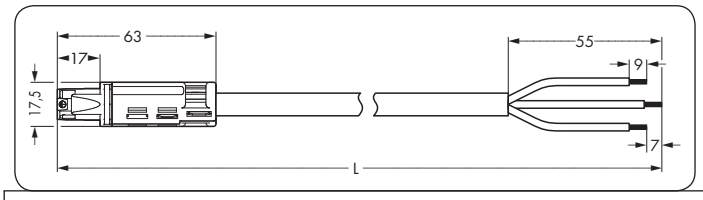

Length	Item no. black	Item no. white	Item no. black	Item no. white
Coding A ● ○				
	PVC		halogen-free	
1 m	774-9993/106-101	.../106-102	774-9993/116-101	.../116-102
2 m	774-9993/106-201	.../106-202	774-9993/116-201	.../116-202
3 m	774-9993/106-301	.../106-302	774-9993/116-301	.../116-302
4 m	774-9993/106-401	.../106-402	774-9993/116-401	.../116-402
5 m	774-9993/106-501	.../106-502	774-9993/116-501	.../116-502
6 m	774-9993/106-601	.../106-602	774-9993/116-601	.../116-602
7 m	774-9993/106-701	.../106-702	774-9993/116-701	.../116-702
8 m	774-9993/106-801	.../106-802	774-9993/116-801	.../116-802

Connecting cables, plug - free end

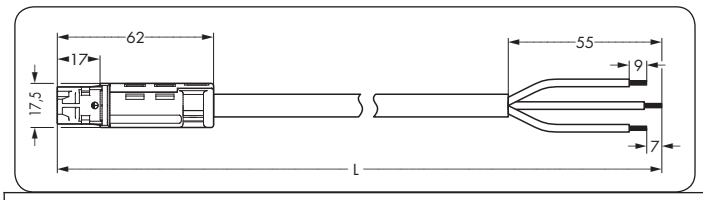

Length	Item no. black	Item no. white	Item no. black	Item no. white
Coding A ● ○				
	PVC		halogen-free	
1 m	774-9993/206-101	.../206-102	774-9993/216-101	.../216-102
2 m	774-9993/206-201	.../206-202	774-9993/216-201	.../216-202
3 m	774-9993/206-301	.../206-302	774-9993/216-301	.../216-302
4 m	774-9993/206-401	.../206-402	774-9993/216-401	.../216-402
5 m	774-9993/206-501	.../206-502	774-9993/216-501	.../216-502
6 m	774-9993/206-601	....	774-9993/216-601	....
7 m	774-9993/206-701	....	774-9993/216-701	....
8 m	774-9993/206-801	....	774-9993/216-801	....

Info

❶ Approval data can be found in the online catalog at www.wagocatalog.com

❷ LL = Locking lever

Other cables on request

● black Coding A (L ⏚ N)
○ white Coding A (L ⏚ N)

Please find some information on the different codings on pages 146 and 147

Cable Assemblies 3 x 2.5 mm²/AWG 14

PVC H05VV-F 3G2.5
halogen-free H05Z1Z1-F 3G2.5

250 V/4 kV/3 20 A

Wire ends bonded 9 mm / 0.35 in
❶ Approvals

Interconnecting cables, socket with LL ❷ - plug

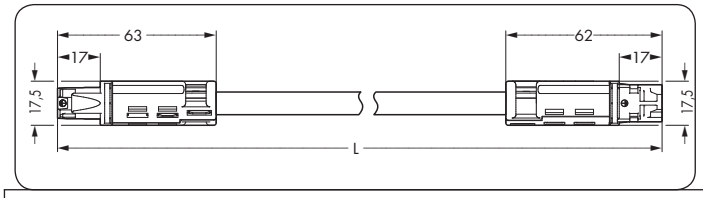

Length	Item no. black	Item no. white	Item no. black	Item no. white
Coding A ● ○				
	PVC		halogen-free	
1 m	774-9993/007-101	.../007-102	774-9993/017-101	.../017-102
2 m	774-9993/007-201	.../007-202	774-9993/017-201	.../017-202
3 m	774-9993/007-301	.../007-302	774-9993/017-301	.../017-302
4 m	774-9993/007-401	.../007-402	774-9993/017-401	.../017-402
5 m	774-9993/007-501	.../007-502	774-9993/017-501	.../017-502
6 m	774-9993/007-601	.../007-602	774-9993/017-601	.../017-602
7 m	774-9993/007-701	.../007-702	774-9993/017-701	.../017-702
8 m	774-9993/007-801	.../007-802	774-9993/017-801	.../017-802

Connecting cables, socket with LL ❷ - free end

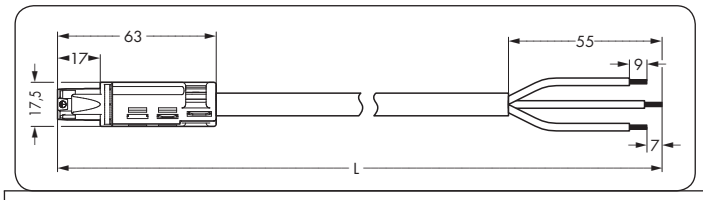

Length	Item no. black	Item no. white	Item no. black	Item no. white
Coding A ● ○				
	PVC		halogen-free	
1 m	774-9993/107-101	.../107-102	774-9993/117-101	.../117-102
2 m	774-9993/107-201	.../107-202	774-9993/117-201	.../117-202
3 m	774-9993/107-301	.../107-302	774-9993/117-301	.../117-302
4 m	774-9993/107-401	.../107-402	774-9993/117-401	.../117-402
5 m	774-9993/107-501	.../107-502	774-9993/117-501	.../117-502
6 m	774-9993/107-601	.../107-602	774-9993/117-601	.../117-602
7 m	774-9993/107-701	.../107-702	774-9993/117-701	.../117-702
8 m	774-9993/107-801	.../107-802	774-9993/117-801	.../117-802

Connecting cables, plug - free end

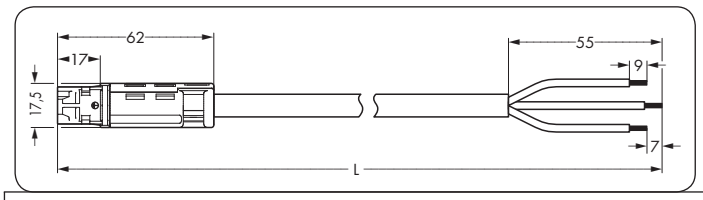

Length	Item no. black	Item no. white	Item no. black	Item no. white
Coding A ● ○				
	PVC		halogen-free	
1 m	774-9993/207-101	.../207-102	774-9993/217-101	.../217-102
2 m	774-9993/207-201	.../207-202	774-9993/217-201	.../217-202
3 m	774-9993/207-301	.../207-302	774-9993/217-301	.../217-302
4 m	774-9993/207-401	.../207-402	774-9993/217-401	.../217-402
5 m	774-9993/207-501	.../207-502	774-9993/217-501	.../217-502
6 m	774-9993/207-601	.../207-602	774-9993/217-601	.../217-602
7 m	774-9993/207-701	.../207-702	774-9993/217-701	.../217-702
8 m	774-9993/207-801	.../207-802	774-9993/217-801	.../217-802

Lengths	Pack.-unit
1 m	50
2, 3, 4 m	25
5, 6 m	15
7, 8 m	10

Other lengths on request

WINSTA® RD

Cable Assemblies 4 x 1.5 mm²/AWG 16

PVC H05VV-F 4G1.5
halogen-free H05Z1Z1-F 4G1.5

250 V/4 kV/3 16 A

Wire ends bonded 9 mm / 0.35 in
❶ Approvals

Interconnecting cables, socket with LL ❷ - plug

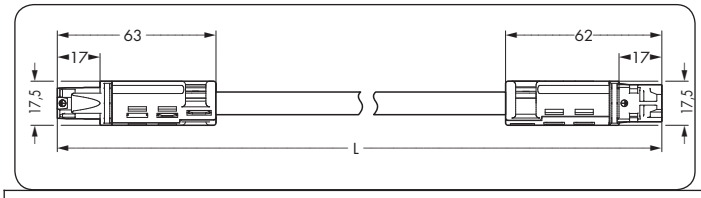

Length	Item no. black	Item no. white	Item no. black	Item no. white
Coding A ● ○				
	PVC		halogen-free	
1 m	774-9994/006-101	.../006-102	774-9994/016-101	.../016-102
2 m	774-9994/006-201	.../006-202	774-9994/016-201	.../016-202
3 m	774-9994/006-301	.../006-302	774-9994/016-301	.../016-302
4 m	774-9994/006-401	.../006-402	774-9994/016-401	.../016-402
5 m	774-9994/006-501	.../006-502	774-9994/016-501	.../016-502
6 m	774-9994/006-601	.../006-602	774-9994/016-601	.../016-602
7 m	774-9994/006-701	.../006-702	774-9994/016-701	.../016-702
8 m	774-9994/006-801	.../006-802	774-9994/016-801	.../016-802

Connecting cables, socket with LL ❷ - free end

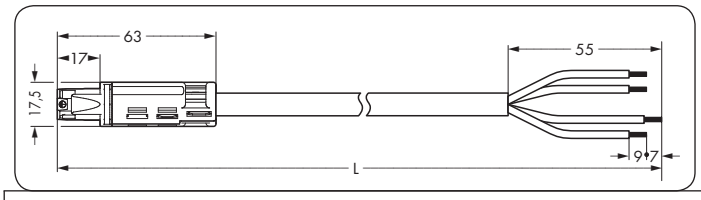

Length	Item no. black	Item no. white	Item no. black	Item no. white
Coding A ● ○				
	PVC		halogen-free	
1 m	774-9994/106-101	.../106-102	774-9994/116-101	.../116-102
2 m	774-9994/106-201	.../106-202	774-9994/116-201	.../116-202
3 m	774-9994/106-301	.../106-302	774-9994/116-301	.../116-302
4 m	774-9994/106-401	.../106-402	774-9994/116-401	.../116-402
5 m	774-9994/106-501	.../106-502	774-9994/116-501	.../116-502
6 m	774-9994/106-601	.../106-602	774-9994/116-601	.../116-602
7 m	774-9994/106-701	.../106-702	774-9994/116-701	.../116-702
8 m	774-9994/106-801	.../106-802	774-9994/116-801	.../116-802

Connecting cables, plug - free end

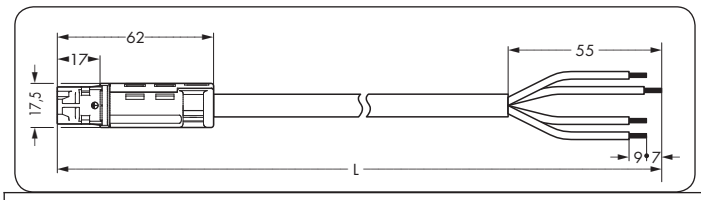

Length	Item no. black	Item no. white	Item no. black	Item no. white
Coding A ● ○				
	PVC		halogen-free	
1 m	774-9994/206-101	.../206-102	774-9994/216-101	.../216-102
2 m	774-9994/206-201	.../206-202	774-9994/216-201	.../216-202
3 m	774-9994/206-301	.../206-302	774-9994/216-301	.../216-302
4 m	774-9994/206-401	.../206-402	774-9994/216-401	.../216-402
5 m	774-9994/206-501	.../206-502	774-9994/216-501	.../216-502
6 m	774-9994/206-601	.../206-602	774-9994/216-601	.../216-602
7 m	774-9994/206-701	.../206-702	774-9994/216-701	.../216-702
8 m	774-9994/206-801	.../206-802	774-9994/216-801	.../216-802

Info

❶ Approval data can be found in the online catalog at www.wagocatalog.com

❷ LL = Locking lever

Other cables on request

● black Coding A (N ⏚ 2 1)
○ white Coding A (N ⏚ 2 1)

Please find some information on the different codings on pages 146 and 147

Lengths	Pack.-unit
1 m	50
2, 3, 4 m	25
5, 6 m	15
7, 8 m	10

Other lengths on request

WINSTA

WINSTA® KNX

893/894 Series, Ø 0.8 mm (0.031 in) / 3 A

5

893 Series
Connectors, 2 Poles 94 – 95

893 Series
Snap-In Device Connectors, 2 Poles 96

893 Series
T-Distribution Connectors 98 – 99

894 Series
Cable Assemblies 2 x Ø 0.8 mm / 0.031 in 100 – 101

Handling *WINSTA®* KNX 893 Series

Preparation

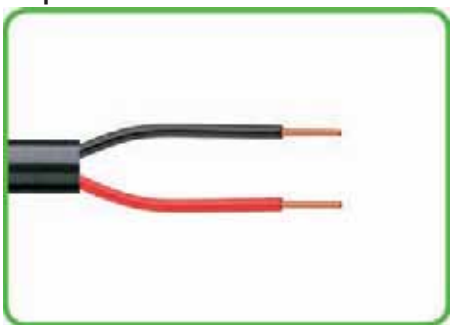

1. Strip length, outer insulation = 23 mm / 0.9 in
2. Strip length = 9 mm / 0.35 in

Conductor connection

Prior to conductor connection, slide the strain relief housing over the cable.

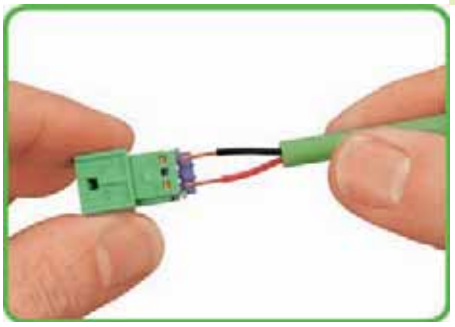

Insert stripped wire directly into the conductor entry . . .

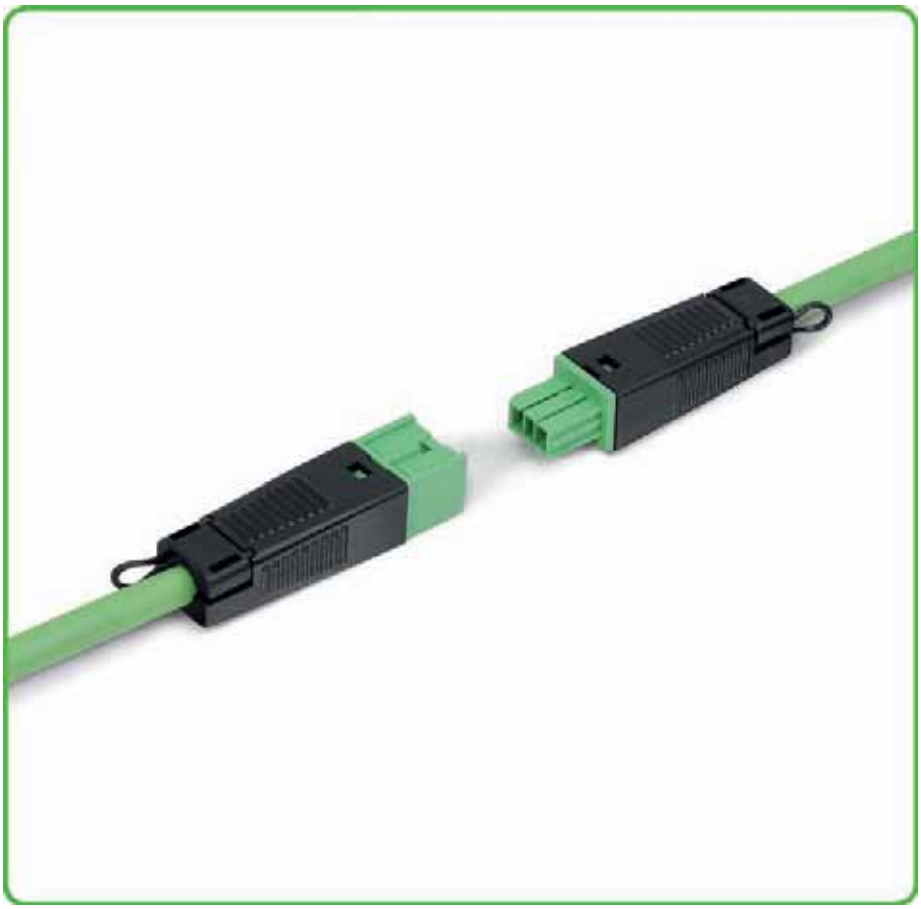

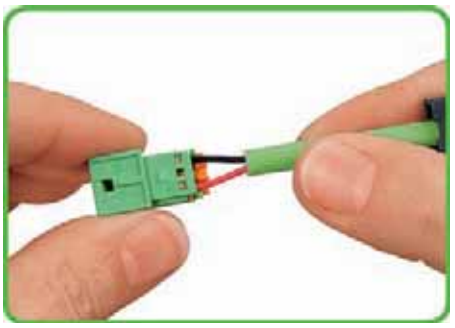

. . . and push it in up to the stop.

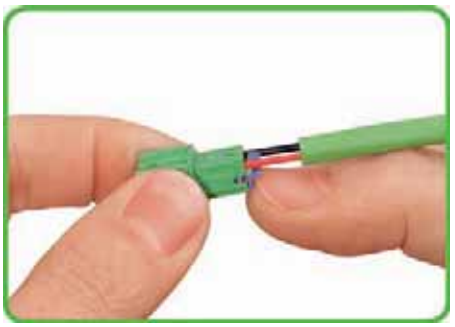

To disconnect, open the clamping springs with the orange actuator and pull off the conductors.

Strain relief assembly

Snap wired connector into the strain relief housing.

Press strain relief firmly on the cable.

Pre-assembled KNX connector

WINSTA® KNX

Sockets and Plugs, 2 Poles

	Ø 0.8 mm / 0.031 in 50 V/0.8 kV/3 3 A 9 mm / 0.35 in ❶ Approvals	Ø 0.8 mm / 0.031 in 50 V/0.8 kV/3 3 A 9 mm / 0.35 in ❶ Approvals

Description	Color	Item no.	Pack.-unit	Color	Item no.	Pack.-unit
Connectors, 2 poles, with spring-clamp connection	**Socket with strain relief housing,** cable diameter 5 - 7 mm / 0.19 - 0.27 in			**Plug with strain relief housing,** cable diameter 5 - 7 mm / 0.19 - 0.27 in		
	green	**893-1002**	50	green	**893-1012**	50

Info	Dimensions (in mm)

❶ Approval data can be found in the online catalog at www.wagocatalog.com

green	Coding E	(1+ 2—)
light gray	Coding F	(1+ 2—)

Please find some information on the different codings on pages 146 and 147

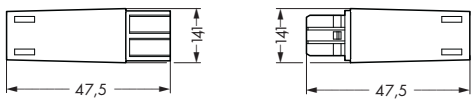

Sockets and Plugs, 2 Poles, with Special Coding

Ø 0.8 mm / 0.031 in 50 V/0.8 kV/3 3 A 9 mm / 0.35 in ❶ Approvals	Ø 0.8 mm / 0.031 in 50 V/0.8 kV/3 3 A 9 mm / 0.35 in ❶ Approvals

Color	Item no.	Pack.-unit	Color	Item no.	Pack.-unit
Socket with strain relief housing,			**Plug with strain relief housing,**		
cable diameter 5 - 7 mm / 0.19 - 0.27 in			cable diameter 5 - 7 mm / 0.19 - 0.27 in		
light gray	**893-1022**	50	light gray	**893-1032**	50

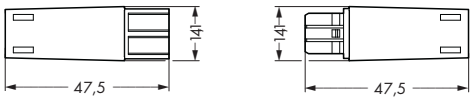

WINSTA® KNX

Snap-In Sockets and Plugs, 2 Poles

Cut-out dimensions	Ø 0.8 mm / 0.031 in 50 V/0.8 kV/3 3 A 9 mm / 0.35 in ❶ Approvals	Ø 0.8 mm / 0.031 in 50 V/0.8 kV/3 3 A 9 mm / 0.35 in ❶ Approvals
Sheet thickness: 0.5 mm to 2 mm (0.02-0.078 in) Tolerance of the cut-out: + 0.1 mm/0.0039 in		

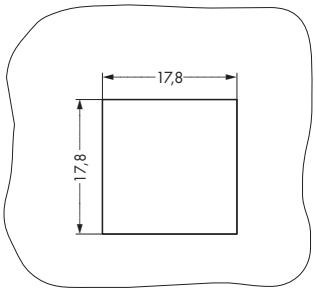

Description	Color	Item no.	Pack.-unit	Color	Item no.	Pack.-unit
Snap-in connectors, 2 poles, with spring-clamp connection	**Socket,** for KNX applications			**Plug,** for KNX applications		
	green	**893-2002**	50	green	**893-2012**	50

Info	Dimensions (in mm)

❶ Approval data can be found in the online catalog at www.wagocatalog.com

green	Coding E	(1+ 2—)
light gray	Coding F	(1+ 2—)

Please find some information on the different codings on pages 146 and 147

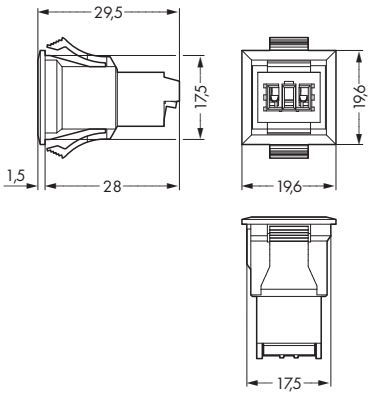

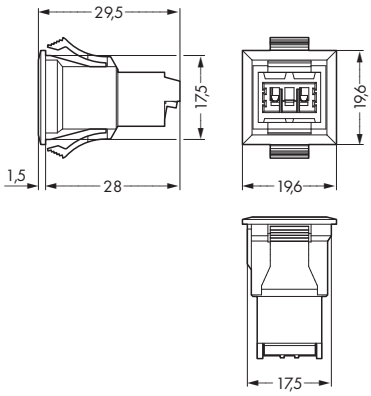

Snap-In Sockets and Plugs, 2 Poles, with Special Coding

Ø 0.8 mm / 0.031 in **50 V/0.8 kV/3** **3 A** **9 mm / 0.35 in** **❶ Approvals**	**Ø 0.8 mm / 0.031 in** **50 V/0.8 kV/3** **3 A** **9 mm / 0.35 in** **❶ Approvals**

Color	Item no.	Pack.-unit	Color	Item no.	Pack.-unit
Socket,			**Plug,**		
with special coding			with special coding		
light gray	**893-2022**	50	light gray	**893-2032**	50

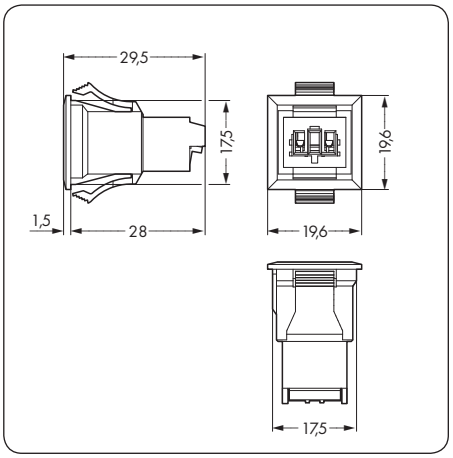

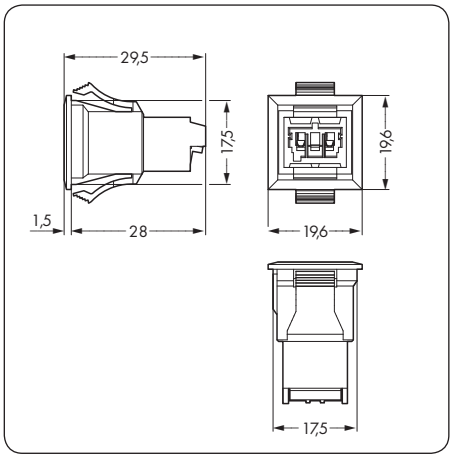

WINSTA® KNX

T-Distribution Connector, 2 Poles

50 V/0.8 kV/3
3 A

❶ Approvals

Description	Color	Item no.	Pack.-unit
T-distribution connector, 2 poles, pluggable	**T-distribution connector, 1 x plug / 2 x socket,** for KNX applications		
	green	**893-1606**	25

Info	Dimensions (in mm)

❶ Approval data can be found in the online catalog at www.wagocatalog.com

green	Coding E	(1+ 2—)
light gray	Coding F	(1+ 2—)

Please find some information on the different codings on pages 146 and 147

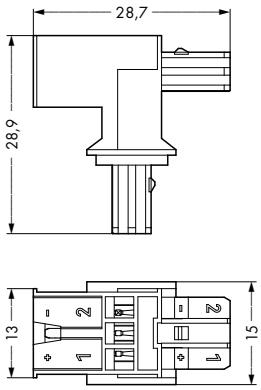

T-Distribution Connector, 2 Poles, with Special Coding

50 V/0.8 kV/3
3 A

❶ **Approvals**

Color	Item no.	Pack.-unit
T-distribution connector, 1 x plug / 2 x socket, with special coding		
light gray	**893-1656** ◯	25

"Flying leads" using a T-distribution connector

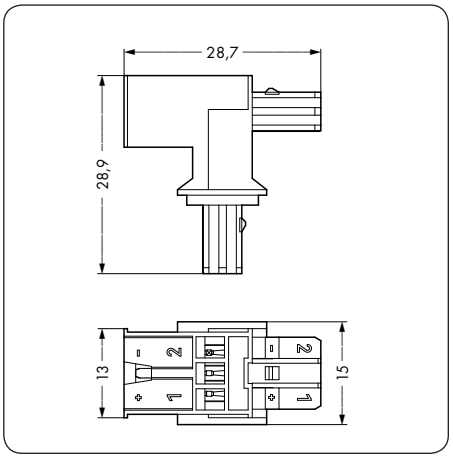

WINSTA® KNX

Cable Assemblies 2 x Ø 0.8 mm / 0.031 in

PVC 2Y(ST)2x(2x0.8)

50 V/0.8 kV/3 3 A

❶ Approvals

Interconnecting cables, socket - plug

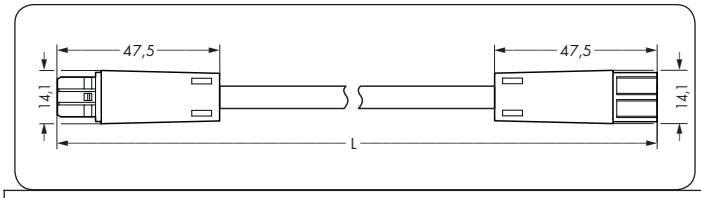

Length	Item no.
Coding E, ● for KNX applications	
	PVC
1 m	**894-8992/033-106**
3 m	**894-8992/033-306**
5 m	**894-8992/033-506**

Connecting cables, socket - free end

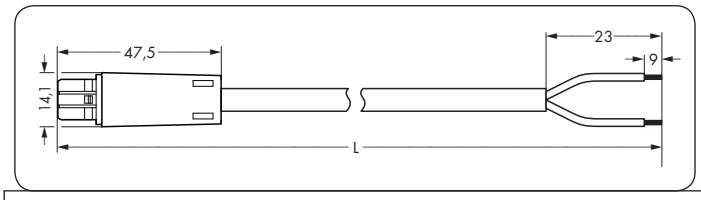

Length	Item no.
Coding E, ● for KNX applications	
	PVC
1 m	**894-8992/133-106**
3 m	**894-8992/133-306**
5 m	**894-8992/133-506**

Connecting cables, plug - free end

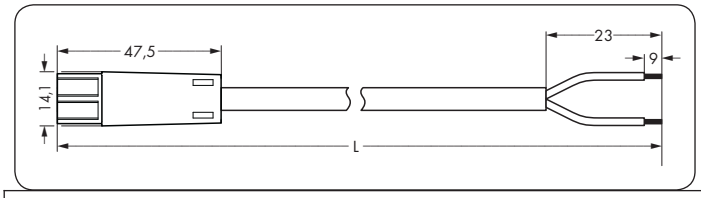

Length	Item no.
Coding E, ● for KNX applications	
	PVC
1 m	**894-8992/233-106**
3 m	**894-8992/233-306**
5 m	**894-8992/233-506**

Info

❶ Approval data can be found in the online catalog at www.wagocatalog.com

● green Coding E (1+ 2–)
○ light gray Coding F (1+ 2–)

Please find some information on the different codings on pages 146 and 147

PVC 2Y(ST)2x(2x0.8)

50 V/0.8 kV/3 3 A

❶ Approvals

Interconnecting cables, socket - plug

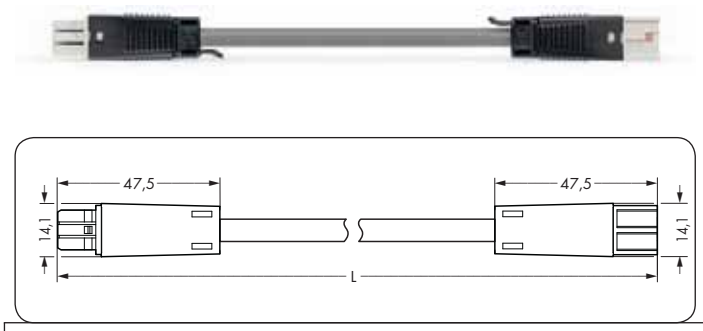

Length	Item no.
Coding F, ◯ for universal fieldbus applications	
	PVC
1 m	894-8992/033-107
3 m	894-8992/033-307
5 m	894-8992/033-507

Connecting cables, socket - free end

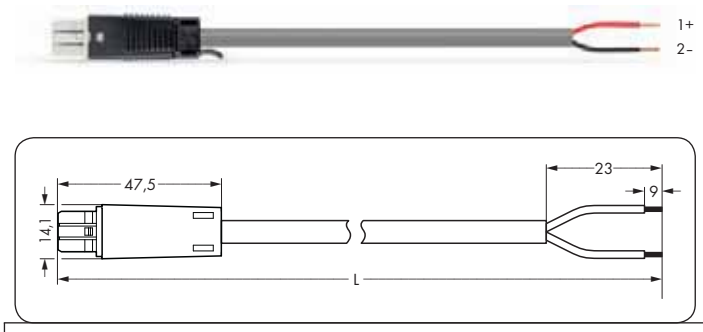

Length	Item no.
Coding F, ◯ for universal fieldbus applications	
	PVC
1 m	894-8992/133-107
3 m	894-8992/133-307
5 m	894-8992/133-507

Connecting cables, plug - free end

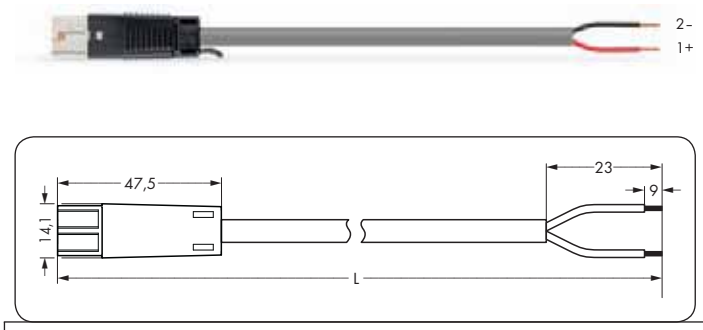

Length	Item no.
Coding F, ◯ for universal fieldbus applications	
	PVC
1 m	894-8992/233-107
3 m	894-8992/233-307
5 m	894-8992/233-507

Lengths	Pack.-unit
1 m	50
3 m	25
5 m	15

Other lengths on request

WINSTA® IDC for Flat Cables up to 16 mm²/AWG 6

6

772 Series
IDC Modules for Flat Cables
5 x 2.5 mm² (AWG 14) / 5 x 4 mm² (AWG 12) /
5 x 2.5 mm² (AWG 14) + 2 x 1.5 mm² (AWG 16)
— Supply Module 104
— Tap-Off Modules, WINSTA® MIDI Connectors 105

893 Series
IDC Modules for Flat Cables
5 x 2.5 mm² (AWG 14) + 2 x 1.5 mm² (AWG 16) / 2 x 1.5 mm² (AWG 16)
— Supply Modules (KNX and Special Coding) 108, 112
— Tap-Off Modules (KNX and Special Coding) 109, 113

896 Series
IDC Modules for Flat Cable 3 x 2.5 mm²/AWG 14
— Supply and Tap-Off Modules 116, 117

895 Series
POWERBLOCK 10 for Flat Cable 5 x 10 mm²/AWG 8
— Supply and Tap-Off Modules 118, 119

895 Series
POWERBLOCK 16 for Flat Cable 5 x 16 mm²/AWG 6
— Supply and Tap-Off Modules 120, 121

897 Series
Flat Cable 2 x 1.5 mm²/AWG 16 114
Flat Cable 5 x 2.5 mm²/AWG 14 106
Flat Cable 5 x 4 mm²/AWG 12 107
Flat Cable 5 x 2.5 mm²/AWG 14 + 5 x 1.5 mm2/AWG 16 107, 110

Important note:

The WINSTA IDC system consists of the flat cables and the appropriate WINSTA connection components that are described in this catalog and marked with "WAGO".
WAGO warranties the fault-free function of the WINSTA IDC System only where original WINSTA components are utilized.

Handling *WINSTA®* IDC 772 Series

Module positioning and contacting

Insert flat cable into bottom part (observe coding!).

Mount IDC module flush with the bottom part. Should the IDC module jam during mounting, turn the upper part by 180° and remount it.

Screw down contact elements up to the stop.

Module positioning and contacting

Connecting an installation cable to the supply module. Stripped solid wires can be connected by simply pushing them in. When using stripped fine-stranded wires, open clamping unit using a screwdriver.

Fixing the supply cable using strain relief housing.

Tighten the strain relief screw using a screwdriver

Phase selection

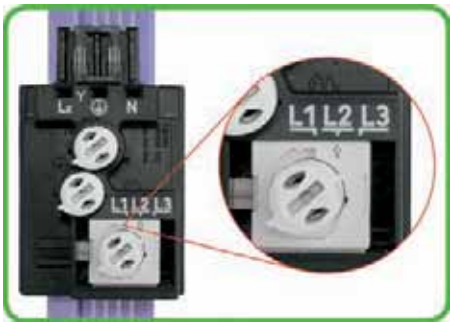

The phase selector is in position L2 (center) when delivered.

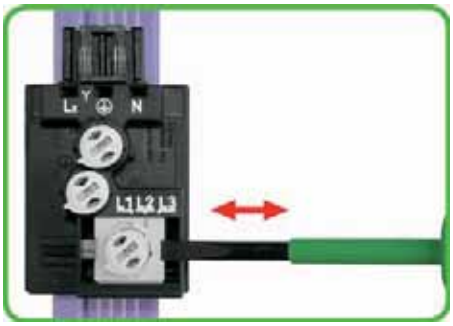

Move the phase selector into position L1 or L3 if required.

After connecting the flat cable, the IDC module is locked and can no longer be moved, even after unscrewing the contact element!

Phase selection

NOTICE: Should it be necessary to tap another phase, this must be done in a different location. To do so, the contact elements must be unscrewed and brought back to their original position.

Lifting the contact elements unlocks the IDC module which makes it possible to move it and to select the new phase.
NOTICE: Do not use it in the same location of the flat cable!

Isolating tape

After removing the module, the contact holes in the flat cable must be sealed using the insulating tape.

772 Series
Supply Module with Strain Relief Housing, 5 Poles

2 x 0.5 – 4 mm² ❶
400 V/6 kV/3
25 A

2 x AWG 20 - 12

9 mm / 0.35 in

❷ Approvals

Description	Color	Item no.	Pack.-unit
Supply module, 5 poles,	**Supply module with strain relief housing ❸,**		
Tap-off module with phase selection, 3 poles,	cable diameter 9 - 13 mm / 0.35 - 0.51 in		
Tap-off module, 5 poles			
	black	**772-261**	25
	red	**772-267**	25
	for flat cables		
	see pages 106 and 107		

Accessories

Mounting plate, for power supply and tap-off modules			
	black	**772-260**	25
Fixing pin, for mounting plates, 6.1 x 2.5 - 4 mm/ 0.24 x 0.098 - 0.157 in	black	**770-601**	250

Info

❶ Wire range: 0.5 - 4 mm² "s + f-st"
0.5 - 2.5 mm² "stranded"

❷ Approval data can be found in the online catalog at www.wagocatalog.com

❸ Strain relief housings for larger cable diameters see page 61

Processing temperature +5 °C to +40 °C

● black Coding A (N ⏚ L1 L2 L3)
● red Coding P (N ⏚ L1 L2 L3)

Please find some information on the different codings on the pages 146 and 147

Dimensions (in mm)

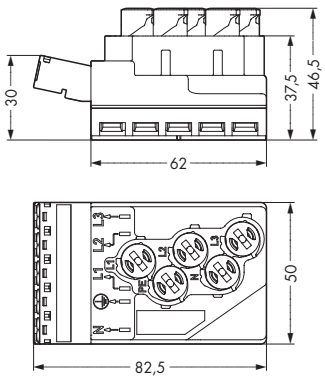

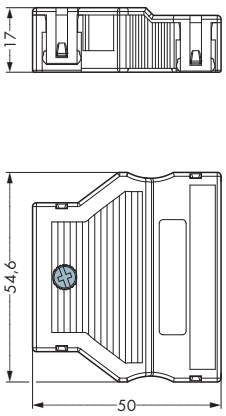

772 Series
Tap-Off Modules, 3 and 5 Poles

400 V/6 kV/3 250 V/4 kV/3 25 A ❷ Approvals	400 V/6 kV/3 25 A ❷ Approvals

Color	Item no.	Pack.-unit	Color	Item no.	Pack.-unit
Tap-off module with phase selection, 3 poles, for WINSTA® MIDI plug-in and distribution connectors, supply position L2			**Tap-off module, 5 poles,** for WINSTA® MIDI plug-in and distribution connectors		
black	**772-263** ●	25	black	**772-262** ●	25
red	**772-269** ●	25	red	**772-268** ●	25
for flat cables see pages 106 and 107			**for flat cables** see pages 106 and 107		
black	**772-260**	25	black	**772-260**	25
black	**770-601**	250	black	**770-601**	250

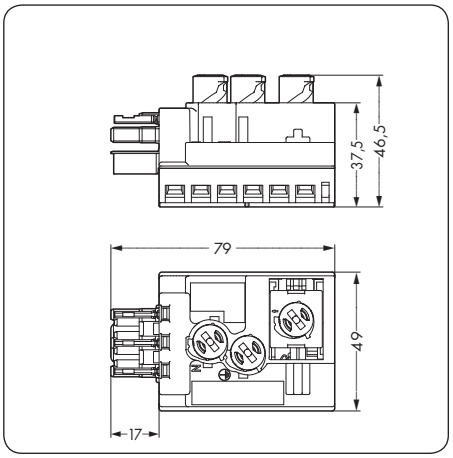

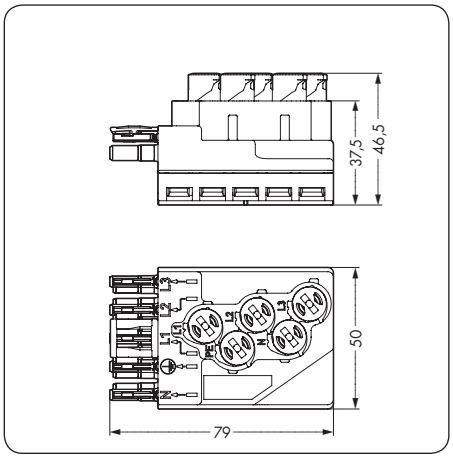

Series 897
Flat Cables 5 x 2.5 mm²/AWG 14

	Flat cable 5 x 2.5 mm²/AWG 14 3L + N + PE halogen-free 0.6/1kV ❶ Approvals	Flat cable 5 x 2.5 mm²/AWG 14 3L + N + PE PVC 0.6/1kV ❶ Approvals

Description	Color	Item no.	Pack.-unit	Color	Item no.	Pack.-unit
Flat cables, halogen-free or PVC, 5 and 7 poles	**Flat cable 5 x 2.5 mm²/AWG 14,** halogen-free			**Flat cable 5 x 2.5 mm²/AWG 14,** PVC		
	gray	**897-253**		light green	**897-251**	
Accessories						
Insulating tape for flat cables						
For sealing the contact holes in the flat cable.	black	**897-900**	10	black	**897-900**	10
Flat cable end cover, plastic						
Every cable end must be fitted with an end cover.	transparent	**897-250**	10	transparent	**897-250**	10
Fixing clamp, plastic, for screw mounting						
	gray	**897-878**	1	gray	**897-878**	1
Stripping pliers		**897-971**	1		**897-971**	1
Cutter		**897-972**	1		**897-972**	1

Info	

❶ **Approval data can be found in the online catalog at www.wagocatalog.com**

897 Series
Flat Cables 5 x 4 mm²/AWG 12 and 5 x 2.5 mm²/AWG 14 + 2 x 1.5 mm²/AWG 16

Flat cable 5 x 4 mm²/AWG 12 3L + N + PE halogen-free 0.6/1kV ❶ Approvals	Flat cable 5 x 2.5 mm²/AWG 14 + 2 x 1.5 mm²/AWG 16 3L + N + PE + 2 Bus halogen-free 0.6/1kV ❶ Approvals	Flat cable 5 x 2.5 mm²/AWG 14 + 2 x 1.5 mm²/AWG 16 3L + N + PE + 2 Bus PVCi 0.6/1kV ❶ Approvals

Color	Item no.	Pack.-unit	Color	Item no.	Pack.-unit	Color	Item no.	Pack.-unit
Flat cable 5 x 4 mm²/AWG 12, halogen-free			**Flat cable 5 x 2.5 mm²/AWG 14 + 2 x 1.5 mm²/AWG 16** halogen-free			**Flat cable 5 x 2.5 mm²/AWG 14+ 2 x 1.5 mm²/AWG 16,** PVC		
black	**897-453**		violet	**897-262**		violet	**897-261**	
black	**897-900**	10	black	**897-900**	10	black	**897-900**	10
transparent	**897-250**	10	transparent	**897-260**	10	transparent	**897-260**	10
gray	**897-878**	1	gray	**897-878**	1	gray	**897-878**	1
	897-971	1		**897-971**	1		**897-971**	1
	897-972	1		**897-972**	1		**897-972**	1

893 Series
Supply Module, 2 Poles, for 7-Core Flat Cable

0.5 – 1.5 mm²
50 V/0.8 kV/3
3 A

5 - 6 mm / 0.22 in
❶ Approvals

The IDC module can only be mounted if the two codings correspond to each other.
Should the IDC module jam during mounting, turn the module by 180° and remount it, flush with the bottom part.

Description	Color	Item no.	Pack.-unit
Supply module, 2 poles, Tap-off modules, 2 poles with screw connection	Tap-off module, tightening torque of the screws 1 Nm		
	gray	893-261	25
	for flat cables see page 110		

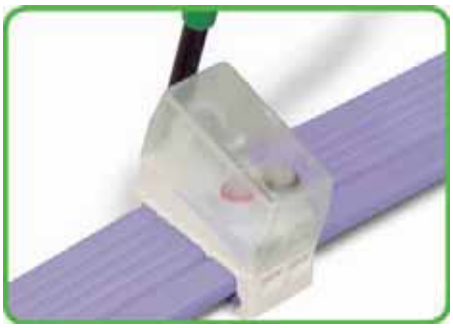

Remove transparent cover using a screwdriver.

The flat cable is contacted by tightening the screws that are marked in red and black.
Observe tightening torque of 1 Nm!

Info

❶ Approval data can be found in the online catalog at www.wagocatalog.com

Processing temperature +5°C to +40°C

green	Coding E	(1+ 2–)
light gray	Coding F	(1+ 2–)

Please find some information on the different codings on the pages 146 and 147

Dimensions (in mm)

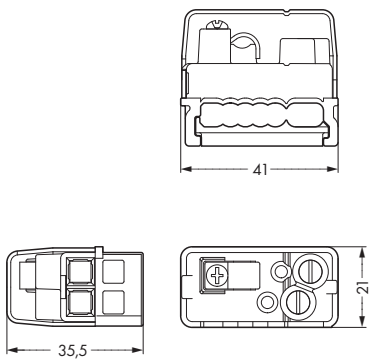

Fix the bus cable using the strain relief and connect stripped wires as shown in the picture.

893 Series
Tap-Off Modules, 2 Poles, for 7-Core Flat Cable

50 V/0.8 kV/3 3 A ❶ Approvals	50 V/0.8 kV/3 3 A ❶ Approvals

The IDC module can only be mounted if the two codings correspond to each other.
Should the IDC module jam during mounting, turn the module by 180° and remount it, flush with the bottom part.

Color	Item no.	Pack.-unit	Color	Item no.	Pack.-unit
Tap-off module, 2 poles,			**Tap-off module, 2 poles,**		
for connectors and cable assemblies,			for connectors and cable assemblies,		
coding E, KNX,			coding F,		
tightening torque of the screws 1 Nm			tightening torque of the screws 1 Nm		
green	**893-262**	25	light gray	**893-269**	25
for flat cables			**for flat cables**		
see page 110			see page 110		

The flat cable is contacted by tightening the screws.
Observe tightening torque of 1 Nm!

Snap on transparent protective cover.

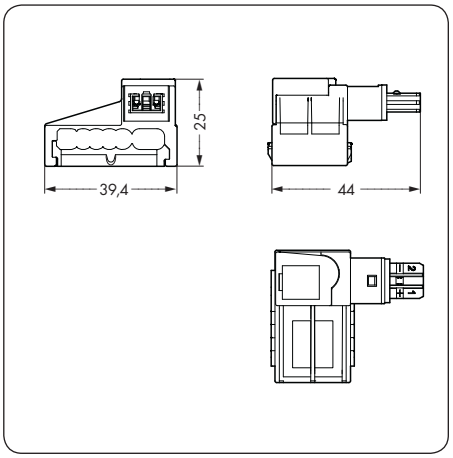

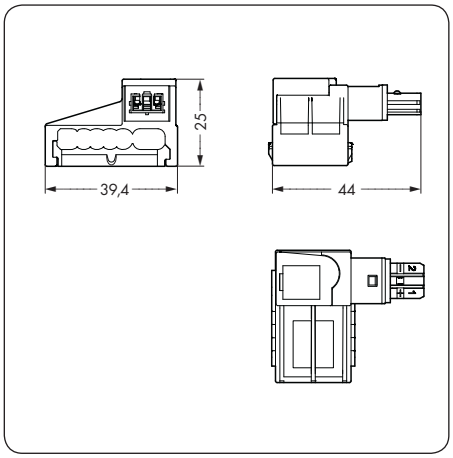

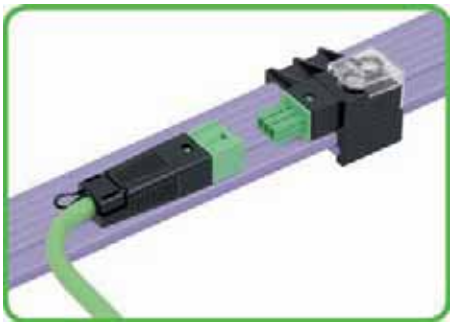

Connecting a cable assemby.

Series 897
Flat Cables 5 x 2.5 mm²/AWG 14 + 2 x 1.5 mm²/AWG 16

	Flat cable 5 x 2.5 mm²/AWG 14 + 2 x 1.5 mm²/AWG 16 3L + N + PE + 2 Bus halogen-free 0.6/1kV ❶ Approvals	Flat cable 5 x 2.5 mm²/AWG 14 + 2 x 1.5 mm²/AWG 16 3L + N + PE + 2 Bus PVCi 0.6/1kV ❶ Approvals

Description	Color	Item no.	Pack.-unit	Color	Item no.	Pack.-unit
Flat cables, halogen-free or PVC, 7 poles	**Flat cable 5 x 2.5 mm²/AWG 14 + 2 x 1.5 mm²/AWG 16** halogen-free			**Flat cable 5 x 2.5 mm²/AWG 14+ 2 x 1.5 mm²/AWG 16,** PVC		
	violet	**897-262**		violet	**897-261**	
Accessories						
Insulating tape for flat cables, For sealing the contact holes in the flat cable.	black	**897-900**	10	black	**897-900**	10
Flat cable end cover, plastic Every cable end must be fitted with an end cover.	transparent	**897-260**	10	transparent	**897-260**	10
Fixing clamp, plastic, for screw mounting	gray	**897-878**	1	gray	**897-878**	1
Stripping pliers		**897-971**	1		**897-971**	1
Cutter		**897-972**	1		**897-972**	1

Info	

❶ **Approval data can be found in the online catalog at www.wagocatalog.com**

WINSTA

893 Series
Supply Module, 2 Poles, for 2-Core Flat Cable

4 x Ø 0.6 - 0.8 mm / 0.023 - 0.031 in "s"
50 V/0.8 kV/3
3 A

5 - 6 mm / 0.22 in

❶ Approvals

The IDC module can only be mounted if the two codings correspond to each other.
Should the IDC module jam during mounting, turn the module by 180° and remount it, flush with the bottom part.

Description	Color	Item no.	Pack.-unit
Supply module, 2 poles,	Tap-off module,		
with 243 Series push-wire connectors	tightening torque 1 Nm		
Tap-off module, 2 poles,			
with screw connection	black	**893-121**	25
	for flat cables		
	see page 114		

The flat cable is contacted by tightening the screws.
Observe tightening torque of 1 Nm!

Snap on transparent protective cover.

Info

❶ Approval data can be found in the online catalog at www.wagocatalog.com

Processing temperature +5 °C to +40 °C

green	Coding E	(1+ 2—)
light gray	Coding F	(1+ 2—)

Please find some information on the different codings on the pages 146 and 147

Dimensions (in mm)

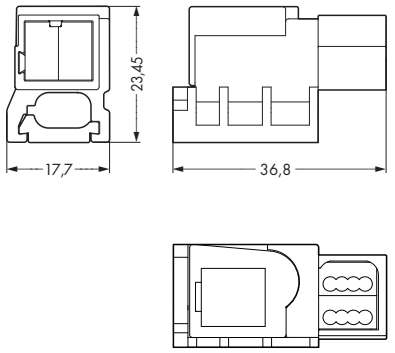

Connecting: insert stripped solid wires up to the stop.

893 Series
Tap-Off Modules, 2 Poles, for 2-Core Flat Cable

50 V/0.8 kV/3 3 A ❶ Approvals	50 V/0.8 kV/3 3 A ❶ Approvals

The IDC module can only be mounted if the two codings correspond to each other.
Should the IDC module jam during mounting, turn the module by 180° and remount it, flush with the bottom part.

Color	Item no.	Pack.-unit	Color	Item no.	Pack.-unit
Tap-off module, 2 poles,			**Tap-off module, 2 poles,**		
for connectors and cables, KNX,			for connectors and cables,		
tightening torque of the screws 1 Nm			tightening torque of the screws 1 Nm		
green	**893-122**	25	light gray	**893-129**	25
for flat cables			**for flat cables**		
see page 114			see page 114		

The flat cable is contacted by tightening the screws.
Observe tightening torque of 1 Nm!

Snap on transparent protective cover.

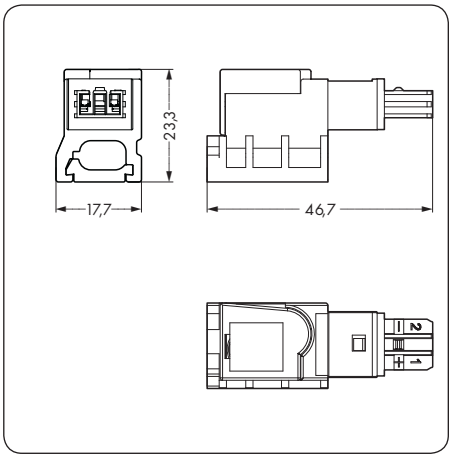

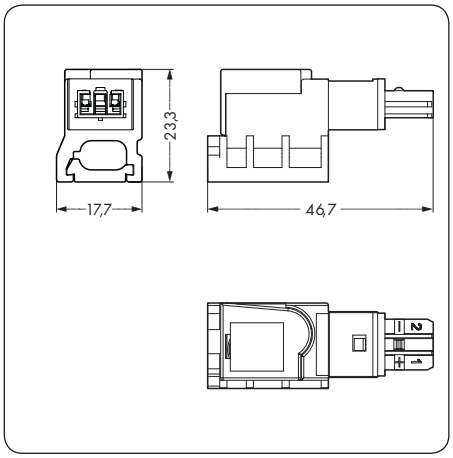

Connecting a cable assemby.

Series 897
Flat Cables 2 x 1.5 mm²/AWG 16

	Flat cable 2 x 1.5 mm²/AWG 16 2 Bus halogen-free 50 V ❶ Approvals	Flat cable 2 x 1.5 mm²/AWG 16 2 Bus PVC 50 V ❶ Approvals

Description	Color	Item no.	Pack.-unit	Color	Item no.	Pack.-unit
Flat cables,	**Flat cable 2 x 1.5 mm²/AWG 16**			**Flat cable 2 x 1.5 mm²/AWG 16**		
halogen-free or PVC,	halogen-free			PVC		
2 poles						
	gray	**897-122**		gray	**897-121**	
Accessories						
Insulating tape for flat cables,						
For sealing the contact holesin the flat cable.	black	**897-900**	10	black	**897-900**	10
Flat cable end cover, plastic						
Every cable end must be fitted with an end cover.	transparent	**897-120**	10	transparent	**897-120**	10
Fixing clamp, plastic, for screw mounting						
	gray	**897-878**	1	gray	**897-878**	1
Stripping pliers		**897-971**	1		**897-971**	1
Cutter		**897-972**	1		**897-972**	1

Info	Dimensions (in mm)

❶ **Approval data can be found in the online catalog at www.wagocatalog.com**

WINSTA

IDC Quick Tap-Off Module 3 x 2.5 mm²

	3 x 2.5 mm²/AWG 14 250 V/4kV/3 24 A ❶ Approvals	3 x 2.5 mm²/AWG 14 250 V/4kV/3 24 A ❶ Approvals

Description	Color	Item no.	Pack.-unit	Color	Item no.	Pack.-unit
Supply module for flat cable 3 x 2.5 mm²/AWG 14, Tap-off module for flat cable 3 x 2.5 mm²/AWG 14, with screw connection	**Supply module,** with screw connection, for flat cable 3 x 2.5 mm²/AWG 14			**Quick tap-off module,** with screw connection, for flat cable 3 x 2.5 mm²/AWG 14		
	light gray	**896-231**	10	light gray	**896-232**	10
	Tightening torque 0.7 Nm Phillips no. 1 screwdriver			Tightening torque 0.7 nm Phillips no. 1 screwdriver		
Accessories						
Fixing clamp, for screw mounting						
	dark gray	**897-839**	200 (8 x 25)	dark gray	**897-839**	200 (8 x 25)

Info	Dimensions (in mm)

❶ Approval data can be found in the online catalog at www.wagocatalog.com

Processing temperature +5 °C to +40 °C

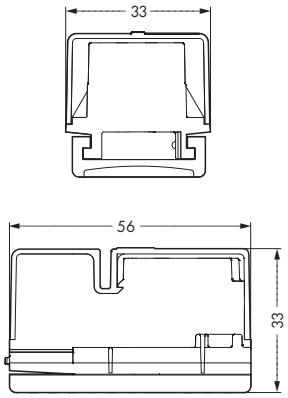

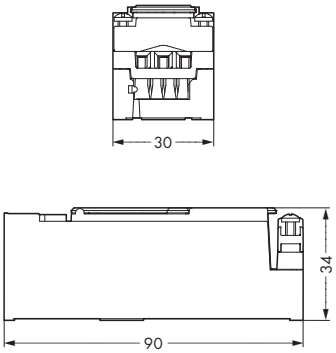

	Flat cable 5 x 2.5 mm²/AWG 14 **250 V** ❶ **Approvals**

Position bottom part and tighten screw, if necessary. Insert flat cable accurately. The key in the bottom part must match the groove in the cable insulation.

Description	Color	Item no.	Pack.-unit
Flat cable 5 x 2.5 mm²/AWG 14	**Flat cable PVC 3 x 2.5 mm²,** L + N + PE		
	light gray	**897-231**	
	Flat cable halogen-free 3 x 2.5 mm²/AWG 14, L + N + PE		
	light gray	**897-232**	
Accessories			
Flat cable end cover, plastic			
Every cable end must be fitted with an end cover.	transparent	**897-230**	10
Insulating tape for flat cables,			
For sealing the contact holes in the flat cable.	black	**897-900**	10
Stripping pliers			
Remove 17 mm of the wire insulation.		**897-931**	1
Cutter			
		897-972	1

Cut outgoing feeder cable, remove outer and inner insulation and insert stripped wires. Tighten screws firmly.
(Tightening torque 0.7 Nm)

Insert upper part onto bottom part to the stop (engages audibly).
Push down and lock lever. All 3 cores are contacted simultaneously.

Tap-off module with WINSTA MIDI socket	Color	Item no.	Pack.-unit
	Tap-off module fitted with WINSTA MIDI socket (coding A), with 35 cm/13.77 in H05VV-F cable 3 x 2.5 mm²/AWG 14		
	black	**896-233**	10
	white	**896-234**	10
	Other lengths on request		

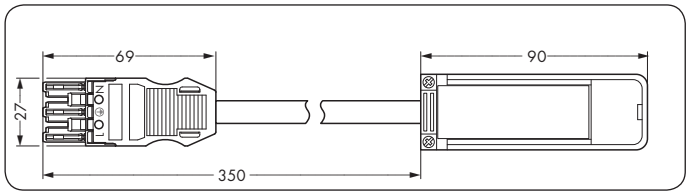

POWERBLOCK 10 for Flat Cable 5 x 10 mm²/AWG 8

	5 x 10 mm²/AWG 8 750 V/8kV/3 57 A ❶ Approvals	5 x 4 mm²/AWG 12 690 V/8kV/3 32 A ❶ Approvals

Description	Color	Item no.	Pack.-unit	Color	Item no.	Pack.-unit
Supply module for flat cable 5 x 10 mm²/AWG 8, with CAGE CLAMP®S connection, Tap-off module with two outputs 5 x 4 mm²/AWG 12, with CAGE CLAMP® connection	**Power supply module,** with TOPJOB® S rail-mounted terminal blocks, for flat cable 5 x 10 mm²/AWG 8			**Tap-off module 5 x 4 mm²/AWG 12,** with spring clamp connection, for flat cable 5 x 10 mm²		
	transparent	**895-1051**	2	transparent	**895-1052**	2
				Tightening torque 0.7 Nm		
Accessories						
Fixing clamp, for screw mounting						
	black	**897-859**	100	black	**897-859**	100

Info	Dimensions (in mm)

❶ Approval data can be found in the online catalog at www.wagocatalog.com

Processing temperature +10°C to +40°C

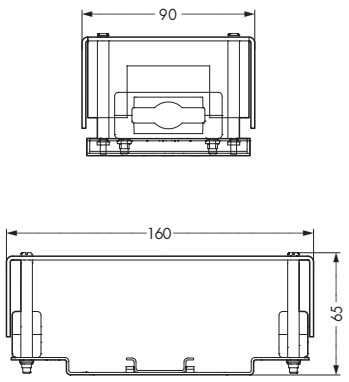

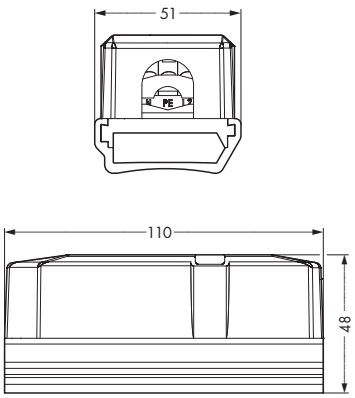

	Flat cable 5 x 10 mm²/AWG 8 **0.6/1kV** **❶ Approvals**

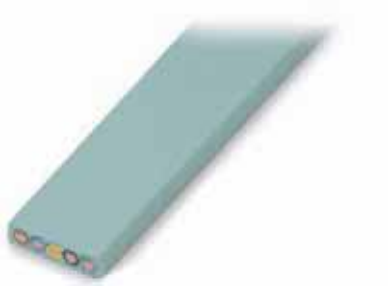

Cut both sides of the outer insulation of the flat cable using a stripping knife (cutting length 30 mm!).

Description	Color	Item no.	Pack.-unit
Flat cable 5 x 10 mm²/AWG 8	**Flat cable PVC 5 x 10 mm²/AWG 8,** 3L + N + PE		
	light green	**897-1051**	
	Flat cable halogen-free 5 x 10 mm²/AWG 8, 3L + N + PE		
	light green	**897-1052**	

Cut off the outer insulation using the cutter.

Accessories

Flat cable end cover, plastic			
Every cable end must be fitted with an end cover.	transparent	**897-1050**	10
Insulating tape for flat cables,			
For sealing the contact holes in the flat cable.	black	**897-900**	10
Stripping knife			
		897-951	1
Cutter			
		897-970	1

Push end cover fully onto the wire ends.

Assembled version

The 895-1652 tap-off module is also available with a WINSTA® MAXI connector.
Item number and delivery time on request.

POWERBLOCK 16 for Flat Cable 5 x 16 mm²/AWG 6

	5 x 16 mm²/AWG 6 690 V/8kV/3 76 A ❶ Approvals	5 x 6 mm²/AWG 10 690 V/8kV/3 41 A ❶ Approvals

Description	Color	Item no.	Pack.-unit	Color	Item no.	Pack.-unit
Supply module for flat cable 5 x 16 mm²/AWG 6, with screw connection, **Tap-off module with two outputs 5 x 6 mm²/AWG 10, with screw connection**	**Supply module 5 x 16 mm²/AWG 6,** with screw connection, for flat cable 5 x 16 mm²/AWG 6, can also be used as tap-off			**Tap-off module with two outputs 5 x 6 mm²/AWG 10,** with screw connection, for flat cable 5 x 16 mm²/AWG 6		
	black	**895-1651**	1	black	**895-1652**	1
	Tightening torque 3.5 Nm			Tightening torque 2 Nm		
Accessories						
Cable fitting, M40 x 1.5, plastic, with O-ring gasket, clamping range Ø 20 - 26 mm / 0.78 - 1.02 in	black	**895-1601**	5			
Cable fitting, M25 x 1,5, plastic, with O-ring gasket, clamping range:						
Ø 9 - 16 mm / 0.35 - 0.63 in				gray	**895-1602**	5
Ø 13 - 18 mm / 0.51 - 0.70 in				gray	**895-1603**	5
Cable fitting, M25 x 1,5, brass, with O-ring gasket, clamping range Ø 20 - 26 mm / 0.78 - 1.02 in					**895-1604**	5
Filler plug, M25 x 1.5, plastic, with O-ring gasket				black	**895-1605**	5

Info

❶ **Approval data can be found in the online catalog at www.wagocatalog.com**

Processing temperature +10°C to +40°C

Dimensions (in mm)

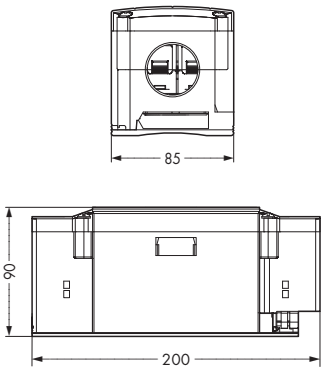

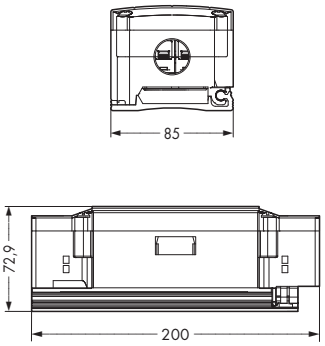

	Flat cable 5 x 16 mm²/AWG 6 **0.6/1kV** ❶ **Approvals**

Description	Color	Item no.	Pack.-unit
Flat cable 5 x 16 mm²/AWG 6	**Flat cable PVC 5 x 16 mm²/AWG 6,** 3L + N + PE		
	light gray	**897-1651**	
	Flat cable halogen-free 5 x 16 mm²/AWG 6, 3L + N + PE		
	light gray	**897-1652**	
Accessories			
Flat cable end cover, plastic			
Every cable end must be fitted with an end cover.	transparent	**897-1650**	10
Insulating tape for flat cables,			
For sealing the contact holes in the flat cable.	black	**897-901**	10
Stripping knife			
		897-952	1
Cutter			
		897-970	1

To make the contact to the flat cable, tighten screw to the stop (observe the tightening torque!) . . .

. . . red contact clips when flush with terminals confirm that contacts are made correctly.

Assembled version

The 895-1652 tap-off module is also available with a WINSTA® MAXI connector.
Item number and delivery time on request.

Tools and Marking Accessories

7

Tools
Operating Tool, Screwdrivers 124
Cable Cutter, Stripping Tools 125
Stripping Pliers, Wire Cutters, Stripping Knives 126

Wiring Aid
Self-Adhesive Marker Strips 127

WAGO
WAGO
WAGO
WAGO
WAGO

Operating Tools

Insulated operating tool for *WINSTA®* MINI connectors

	Item no.	Pack.-unit
Operating tool,		
insulated,		
for 890 Series WINSTA® MINI Connectors		
2-way	**890-392**	1
3-way	**890-393**	1

Screwdriver with partially insulated shaft for optimal operation of connectors

Color	Item no.	Pack.-unit
Screwdriver,		
with partially insulated shaft,		
blade 2.5 mm x 0.4 mm (0.098 in x 0.0157 in)		
green	**210-619**	1
Screwdriver,		
with partially insulated shaft,		
blade 3.5 mm x 0.5 mm (0.138 in x 0.0197 in)		
green	**210-620**	1
Screwdriver,		
with partially insulated shaft,		
blade 5.5 mm x 0.8 mm (0.216 in x 0.0314 in)		
green	**210-621**	1
Screwdriver set,		
with partially insulated shaft,		
consists of 210-619, 210-620 and 210-621		
green	**210-622**	1

Screwdriver with insulated shaft for optimal operation of 772 Series IDC Modules

Color	Item no.	Pack.-unit
Screwdriver, ❶		
short version,		
blade 6.5 mm x 1.2 mm (0.255 in x 0.047 in)		
green	**210-635**	1
Screwdriver, ❷		
with insulated shaft,		
blade 6.5 mm x 1.2 mm (0.255 in x 0.047 in)		
green	**210-636**	1

Cable Cutter and Stripping Tools

Cable cutter acc. to VDE for copper and aluminum conductors up to 35 mm²/AWG 2	Stripping tool "Quickstrip 10" 0.02 mm² - 10 mm² (AWG 34 - 8) "f-st" (6 mm²/AWG 10 "s") Cable cutter for conductors up to 10 mm²/ AWG 8 "f-st" (1.5 mm²/AWG 16 "s")	Stripping tool "Quickstrip 16" 4 mm² - 16 mm² (AWG 12 - 6) Cable cutter for conductors up to 10 mm²/ AWG 8 "f-st" (1.5 mm²/AWG 16 "s")

Color	Item no.	Pack.-unit	Color	Item no.	Pack.-unit	Color	Item no.	Pack.-unit
Cable cutter,			**Stripping tool "Quickstrip 10",**			**Stripping tool "Quickstrip 16",**		
for conductors			for fine-stranded conductors			for all conductors		
from 0.25 mm² to 35 mm² (AWG 22 - 2)			from 0.02 mm² to 10 mm² (AWG 34 - 8),			from 4 mm² to 16 mm² (AWG 12 - 6)		
			for solid conductors					
			from 0.02 mm² to 6 mm² (AWG 34 - 10)					
green	**206-118**	1	black	**206-124**	1	black	**206-125**	1

Accessories

			Spare cassette "standard"			**Spare cassette "standard"**		
				0.02 mm² - 10 mm² (AWG 34 - 8)			4 mm² - 16 mm² (AWG 12 - 6)	
				206-126	1		**206-128**	1
			Spare cassette with "V" blade					
				for PTFE conductors from				
				0.02 mm² to 4 mm² (AWG 34 - 12)				
				206-127	1			

Application notes

Cutting the cable.

Stripping the conductor.

Cutting the conductor.

- Conductor cross section can be adjusted easily.
- The stripping blade will not cause any damage to the conductor.
- The insulation will not be damaged by the wire holders during this adjustment process.
- The wire holders and the stripping blades will automatically open once the stripping process is completed.
- Strip length can be adjusted exactly using the movable stop.
- Stripping blade can be exchanged.
- Cable cutter is self-sharpening and protected against accidental contact.
- Entire body made of fiberglass reinforced polyamide.

Stripping Pliers, Wire Cutters, Stripping Knives

Stripping pliers	Wire cutters	Stripping knives

Color	Item no.	Pack.-unit
Stripping pliers,		
with insulated handles		
red	**897-931**	1
for flat cables		
3 x 2.5 mm²/AWG 14		
red	**897-971**	1
for flat cables		
2 x 1.5 mm²/AWG 16		
5 x 2.5 mm²/AWG 14		
5 x 4 mm²/AWG 12		
5 x 2.5 mm²/AWG 14 + 2 x 1.5 mm²/AWG 16		

Color	Item no.	Pack.-unit
Wire cutters,		
with partially insulated handles		
red	**897-970**	1
for flat cables		
5 x 10 mm²/AWG 8		
5 x 16 mm²/AWG 6		
red	**897-972**	1
for flat cables		
2 x 1.5 mm²/AWG 16		
3 x 2.5 mm²/AWG 14		
5 x 2.5 mm²/AWG 14		
5 x 4 mm²/AWG 12		
5 x 2.5 mm²/AWG 14 + 2 x 1.5 mm²/AWG 16		

Color	Item no.	Pack.-unit
Stripping knives		
light gray	**897-951**	1
for flat cables		
5 x 10 mm²/AWG 8		
light gray	**897-952**	1
for flat cables		
5 x 16 mm²/AWG 6		

Wiring Aid, Marker Strips — WINSTA-MIDI

Wiring aid,
for 5-pole connectors, distribution connectors with phase selection and IDC supply modules, suitable for solid and stranded conductors.

Item no. 770-100

Strip outer insulation, insert cable into the wiring aid and arrange the single wires according to the marking, starting with N.

Cut wire ends.

Strip wire ends 9 mm/0.354 in (see marking).

Push connector on prepared wires (picture shows a socket).

Slide connector to the stop over wire ends.

Connector with inserted wires.

Socket with connected cable in a strain relief housing.

Wired connector with strain relief housing.

Marker strips

	Item no.	Pack.-unit
Self-adhesive marker strips		
on DIN A4 cards,		
strip length 182 mm, white		
	210-333	1
for 770 Series		
Height of marker strip 6 mm/0.236 in (40 x)		
Size of marker field:		
Strain relief, 3-pole, 28 x 6.5 mm/0.256 in		
Strain relief, 4-pole, 38 x 6.5 mm/0.256 in		
Strain relief, 5-pole, 48 x 6.5 mm/0.256 in		
Strain relief, 6-pole, 62 x 6.5 mm/0.256 in		
	210-334	1
for 771 Series		
Height of marker strip 5 mm/0.196 in (48 x)		
Size of marker field:		
Strain relief, 3-pole, 22 x 5.2 mm/0.204 in		
Strain relief, 4-pole, 32 x 5,2 mm/0.204 in		
Strain relief, 5-pole, 42 x 5.2 mm/0.204 in		
Marking software:		
smartMARKING		
CD-ROM	**888-402/0510-0000**	1

System Partners

8

Kontaktsysteme GmbH 130

König + Neurath AG 130

Lenneper GmbH & Co. KG 131

LITE-LICHT GmbH 131

Ludwig Leuchten KG 132

Philips AEG Licht GmbH 132

POPP GmbH 133

PUK-WERKE KG 133

REGIOLUX Fränkische Leuchten GmbH 134

RIDI Leuchten GmbH 134

Schulte Elektrotechnik GmbH & Co. KG 135

Siteco Beleuchtungstechnik GmbH 135

TEHALIT GmbH & Co. KG 136

TRILUX-LENZE GmbH + Co. KG 136

WILA Leuchten GmbH 137

Zumtobel Staff GmbH 137

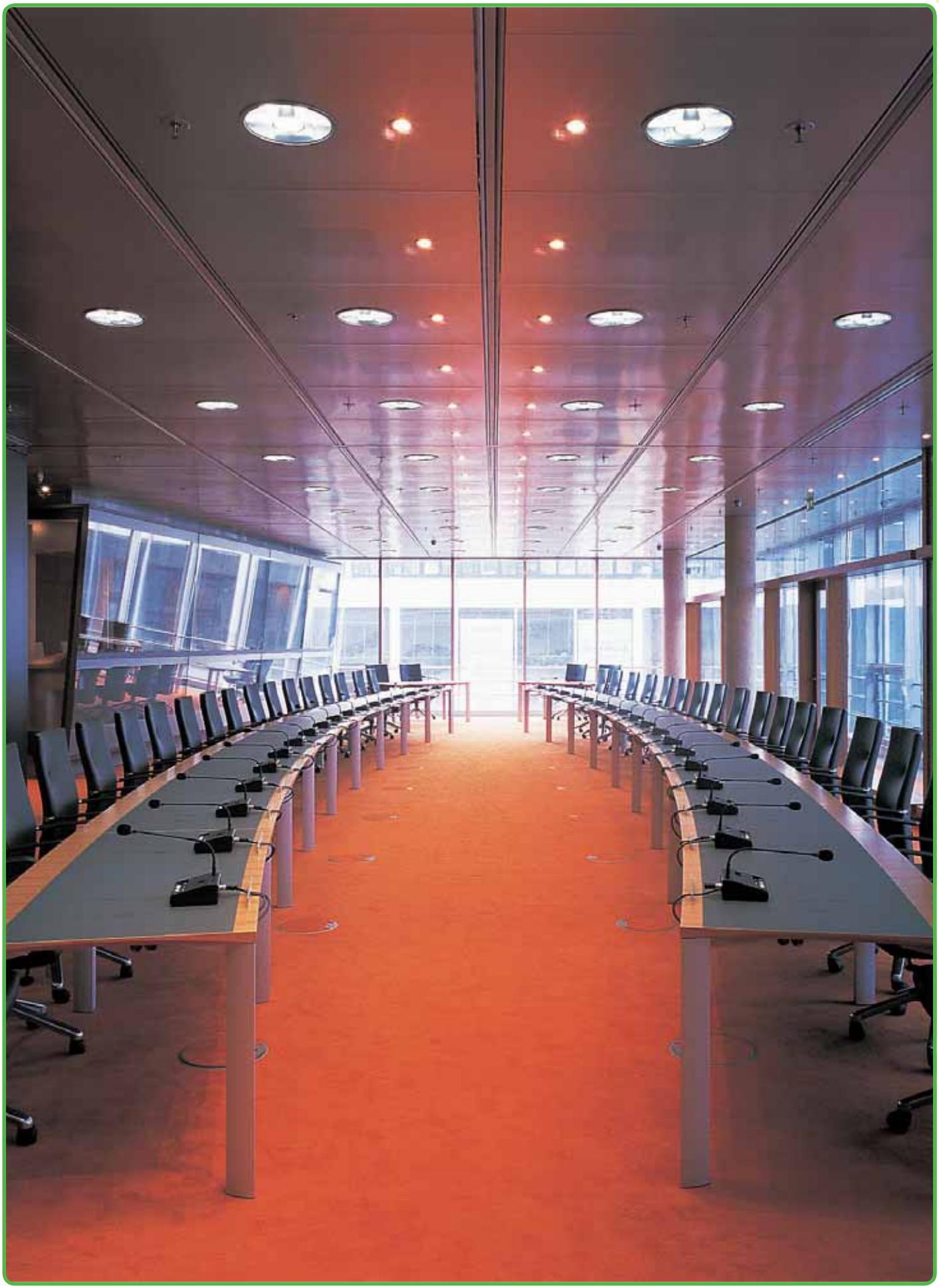

System Partners

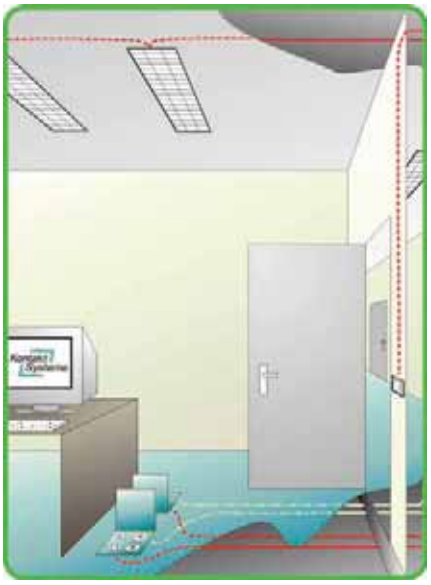

FLEXISS flexible installation system for raised floor and suspended ceiling:
equipped with *WINSTA*®.

Kontaktsysteme GmbH
P.O. Box 1237 • Schloßhaldenstraße 11
71282 Hemmingen
Phone: +49 (0) 7150 / 9550-0
Fax: +49 (0) 7150 / 9550-50
www.kontaktsysteme.de • info@kontaktsysteme.de

We provide harmonized overall office furnishing solutions. One-stop shopping, from office planning to the seating furniture.
König + Neurath – the one-stop shop for efficient and economic office interior design.

König + Neurath AG
Büromöbelsysteme
Industriestr. 1-3 • 61184 Karben
Phone: +49 (0) 6039 / 483-0
Fax: +49 (0) 6039 / 483-214
www.koenig-neurath.de • info@koenig-neurath.de

All recessed luminaires are available with the *WINSTA*® connector system.

Lenneper GmbH & Co. KG
Klosterstraße 60 • 51645 Gummersbach
Phone: +49 (0) 2261 / 5409-0
Fax: +49 (0) 2261 / 5409-40
www.lenneper.de • verkauf@lenneper.de

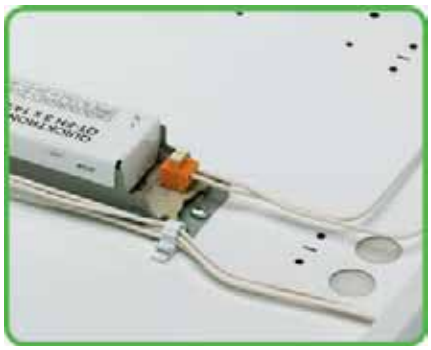

The following types of luminaires are available with *WINSTA*®:

- Recessed downlights
- "Soft Light" recessed luminaires
- Recessed louvered luminaires T5
- Recessed louvered luminaires T8
- In-paneling lighting systems
- Furniture lighting ML
- Batten luminaires STNF

LITE-LICHT GmbH
Boschstraße • 33442 Herzebrock-Clarholz
Phone: +49 (0) 5245 / 443-0
Fax: +49 (0) 5245 / 443295 -96
www.lite-licht.de • lite-licht@lite-licht.de

***WINSTA*®- The perfect connection!**

System Partners

Suspended luminaire

Linear fluorescent luminaire

Louvered luminaire

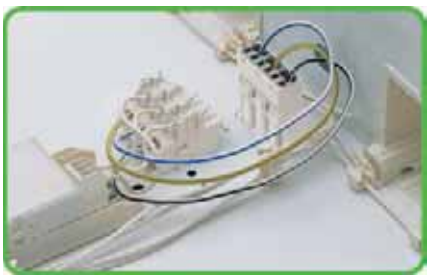

The following types of luminaires are available with *WINSTA*®:
- PLANUS
- LEVIS
- ORBIS
- Louvered luminaires
- Continuous rows of luminaires

LUDWIG LEUCHTEN
MEHR ALS LICHT

Ludwig Leuchten KG
Frühlingstr. 15 • 86415 Mering
Phone: +49 (0) 8233 / 387-0
Fax: +49 (0) 8233 / 387-200
www.ludwig-leuchten.de
zen@ludwig-gebr.de

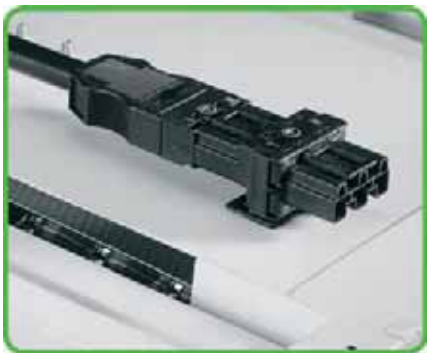

The following types of luminaires are available with *WINSTA*®:
- FLATLIGHT
- TBS625-635
- INDOLIGHT

PHILIPS AEG

Philips AEG Licht GmbH
Rathenaustraße 2-6 • 31832 Springe
Phone: +49 (0) 5041 / 75-0
Fax: +49 (0) 5041 / 75-508
Service-Tel.: 01802 / 54248 (zum Ortstarif)
www.aeglicht.philips.de
infocenter.philips.aeg.licht@philips.com

Due their modular design, the well proven POPP adaptus® professional socket strips can meet all customer requirements. Therefore, the adaptus® furniture socket strips equipped with WAGO WINSTA® are very well suited for building installation applications.

POPP GmbH
Kulmbacher Straße 27 • 95460 Bad Berneck
Phone: +49 (0) 9273 / 73-0
Fax: +49 (0) 9273 / 73-130
www.popp-elektro.de • info@popp-elektro.de

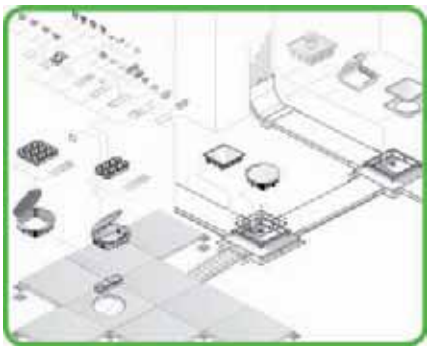

The following underfloor system fitting components are available with *WINSTA*®:
- Raised floor systems
- Cavity floor systems

Other components available upon request

PUK-WERKE KG
Nobelstr. 45-51 • 12057 Berlin
Phone: +49 (0) 30 / 68283-01
Fax: +49 (0) 30 / 68283-266
www.puk-werke.de • vertrieb@puk-werke.de

System Partners

The following types of luminaires are available with *WINSTA*®:
- UE (recessed luminaires)
- Meta ZD (pendant luminaires)

REGIOLUX

REGIOLUX Fränkische Leuchten GmbH
Hellinger Str. 3 • 97486 Königsberg
Phone: +49 (0) 9525 / 89-0
Fax: +49 (0) 9525 / 89-374
www.regiolux.de • info@regiolux.de

The following types of luminaires are available with *WINSTA*®:

EBRE 418-3 W	EBRE 314 W-EVG	Ecalux-E 236 RW
EBRE 418 W	EBRE 414 W-EVG	Ecalux-E 418 RW
EBRE 418-3 A	EBRE 314 A-EVG	Ecalux-E 418-3 RW
EBRE 418 A	EBRE 414 A-EVG	Ecalux-E 236 RA
EBRE 418-3 SM	EBRE 314 SM-EVG	Ecalux-E 418 RA
EBRE 418 SM	EBRE 414 SM-EVG	Ecalux-E 418-3 RA
EBRE 418-3 SG	EBRE 314 SG-EVG	Ecalux-E 236 PRG
EBRE 418 SG	EBRE 414 SG-EVG	Ecalux-E 418 PRG
EBRE 418 SG-BAP		Ecalux-E 418-3 PRG

Also available as a design with electronic ballast.

RIDI
Licht für Mensch und Technik

RIDI Leuchten GmbH
Hauptstr. 31-33 • 72417 Jungingen
Phone: +49 (0) 7477 / 872-0
Fax: +49 (0) 7477 / 872-48
www.ridi.de • info@ridi.de

The following systems are available with *WINSTA®*:
- EVOline® Express
- EVOline® Dock
- EVOline® Port

schulte elektrotechnik

Schulte Elektrotechnik GmbH & Co. KG
Juengerstraße 21 • 58515 Lüdenscheid
Phone: +49 (0) 2351 / 94810
Fax: +49 (0) 2351 / 42658
www.schulte.com
info@schulte.com

The following types of luminaires are available with *WINSTA®*:
- Comfit® M
- Comfit® Plus
- Comfit® S
- Lunis ELunis E

siteco Sie werden sehen.

Siteco Beleuchtungstechnik GmbH
Ohmstr. 50 • 83301 Traunreut
Phone: +49 (0) 8669 / 33-822
Fax: +49 (0) 8669 / 33-540
www.siteco.de • info@siteco.de

***WINSTA®*- The perfect connection!**

System Partners

BR netway
with *WINSTA®* connectors
for power supply
and distribution.

TEHALIT

TEHALIT GmbH & Co. KG
Seebergstr. 37 • 67716 Heltersberg
Phone: +49 (0) 1803 / 232328
Fax: +49 (0) 6842 / 9455555
www.tehalit.de • info@hager.de

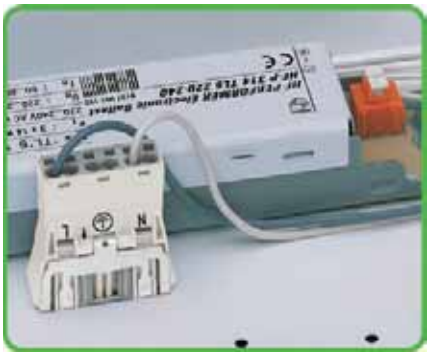

The following types of luminaires are available with *WINSTA®*:
- Louvered recessed luminaires
- Recessed diffuser luminaires
- Damp-proof recessed luminaires
- Downlights

Other luminaires available upon request.

TRILUX

TRILUX-LENZE GmbH + Co. KG
Heidestraße • 59759 Arnsberg
Phone: +49 (0) 2932 / 301-0
Fax: +49 (0) 2932 / 301-375
www.trilux.de • info@trilux.de

The following types of luminaires are available with *WINSTA*®:

- E Connect 2M
- E Connect MS3
- circLet MS3
- Variatic recessed luminaire

WILA

WILA Leuchten GmbH
P.O. Box 2611 • 58596 Iserlohn
Vödeweg 9-115 • 58638 Iserlohn
Phone: +49 (0) 2371/823-0
Fax: +49 (0) 2371/823-202
www.wila.com • info@wila.com

The following types of luminaires are available with *WINSTA*®:

- MIREL louvered luminaires
- MILDES LICHT IV (SOFT LIGHT IV) Concept
- PANOS downlights

ZUMTOBEL STAFF
DAS LICHT ®

Zumtobel Staff GmbH
Schweizer Str. 30 • 6851 Dornbirn
Österreich
Phone: +43 (0) 5572 / 390-0
Fax: +43 (0) 5572 / 22826
www.zumtobelstaff.com • info@zumtobelstaff.co.at

Reference Projects

9

Marine Applications 140

Airports 140

Motor Homes 141

Trade Show Design 141

Office Buildings 142

Prefabricated Houses 142

Lab Work Stations 143

Rolling Stock 143

NORWEGIAN JEWEL

Marine Applications

MEYER Shipyard in Papenburg uses the *WINSTA®* connector system for the installation of nearly all ceiling lights in cruise ships, and utilizes the advantage of dual connections in sockets and plugs of the *WINSTA®* MIDI product family for the looping of the conductors from lamp to lamp.
The distributors in the cabins too are completely equipped with *WINSTA®* MIDI snap-in type device connectors. The ready wired distributor can be easily commissioned by simple and quick plugging of the outgoing feeders following the assembly in the cabin walls.

Airports

The decision was made for 5-pole *WINSTA®* MIDI connectors when designing the ceiling lighting at **Prague Airport**. Besides the required neutral and protective conductors, the other three poles are used to feed three separate lighting circuits - for standard lighting, emergency lighting and escape way lighting.
Because the same light fixture was to be used for all three circuits, three different connecting cables were manufactured by WAGO as per customer specification.

Motor Homes

LMC Caravan GmbH & Co. KG in 48336 Sassenberg, Germany, is a manufacturer of mobile homes and trailers. They use *WINSTA®* for the installations in the mobile homes and trailers. The utilization of a plug-in connector system permits the pre-fabrication of installation components outside the actual production line and parallel to the assembly of the vehicles. At the end, the whole installation is executed quickly and hence, cost savingly, by simple plugging prior to the soft trimming of the walls.

Trade Show Design

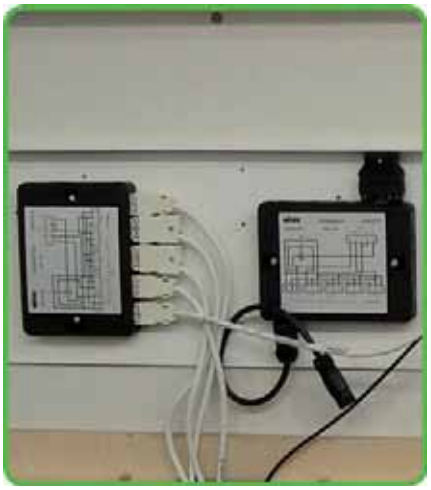

The **trade show outfitter Brose** produces for a number of customers booths and exhibition spaces in various sizes. In order to keep the inrush current, which is caused by the electronic ballasts, low when dealing with big stands and many lighting fixtures and hence to avoid the activation of the overcurrent protective device, different lighting areas used to be switched on manually one after the other. With just a single individually fabricated variant of the *WINSTA®* distribution box and an electronic time relay with switch-on delay, integrated into a 5-pole *WINSTA®* MIDI plug, the switching process was conveniently automated.

Office Buildings

The Danish headquarters of globally operating Deloitte & Touche, the famous company for "audit, tax consultancy, consulting and corporate finance" is located in the **COPENHAGEN ATRIUM**. *WINSTA®* MIDI is used in two main areas. The lighting fixtures in the suspended ceilings have been completely wired with 5-pole plugs and sockets (partly using the DALI version with blue insulation) for both power supply and connection cables as well as T-joints. All lighting fixtures from ARKILUX were equipped with *WINSTA®* snap-in connectors.

Within the sub-floor, *WINSTA®* boxes with two separate 230V AC circuits provide for the individual work spaces in the offices, one for the general power supply, the other for the power supply of the PCs exclusively.

Prefabricated Houses

The **pre-fab contractor ExNorm, KAMPA AG** has decided for electrical installations using the *WINSTA®* MIDI system. The decisive factor was the requirement to minimize work at the job site and to increase the value added in the shop. The major portion of the electrical installation can be executed at defined environmental conditions, independently from wind and weather sitations. All pre-fab components are electrically connected to each other via simple plug-in processes on the site.

Lab Work Stations

Fa. Wesemann in 28857 Syke, Germany, offers complete lab installations, including the power supply of individual work spaces. For the electrical installations, they use plug-in connectors of the *WINSTA®* system. All supply channels are equipped with cable assemblies.
These elements can be easily connected to each other via simple plugging during the final assembly of the lab work stations, without expensive conductor preparation and connection.

Rolling Stock

Bombardier Transportation Berlin uses plug-in connectors of the *WINSTA®* system in their "Talent Connex Pool". For the voltage supply at passenger seats, e.g. for the connection of notebooks to the 230V supply, special pre-fabricated "Conductor chains" were installed in the sidewalls of the wagons. They consist of a 3-pole plug on the feeder side and several 3-pole sockets from which, due to the dual connection option, the conductor can be looped from seat to seat.

10

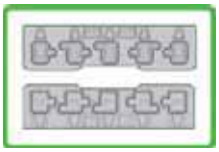

Coding Overview 146 – 147

Your Questions – Our Answers 148 – 149

Technical Data 150 – 155

Approvals – User Guide 156 – 157

Item Numbers 158 – 161
Index 162 – 167

Addresses Worldwide and in Germany 168

ZERTIFIKAT
ZERTIFIKAT • CERTIFICATE • CERTIFICADO • CERTIFICAT
WAGO Vertriebsgebiete in Deutschland
CE

Codings

Description	WINSTA MINI		WINSTA MIDI		
	2-pole	3-pole	3-pole	4-pole	5-pole
Series	**890 / 891**	**890 / 891**	**770 / 771 / 772❶**	**770 / 771**	**770 / 771 / 772❶**
Coding A black white e.g., universal applications			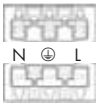		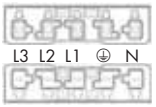
Coding B gray e.g., control applications	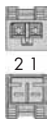		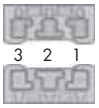	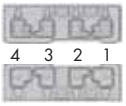	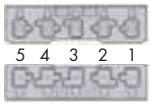
Coding E or F Coding E: KNX applications, green Coding F: special coding, light gray					
Coding I blue e.g., dimming					
Coding P red e.g., computer applications (UPS)					
Coding Q green "Clean Earth" applications					
Coding R Housing color: orange e.g., LON bus					
Coding S brown e.g., switching applications					

❶ Only codings A and P are suited for 772 Series

Description	WINSTA MAXI	WINSTA RD		WINSTA KNX	
	5-pole	3-pole	4-pole	2-pole	
Series	**831**	**774**	**774**	**893/894**	
Coding A black white e.g., universal applications	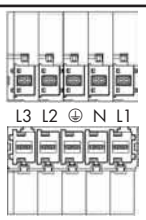		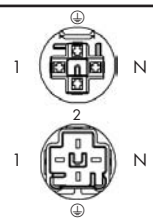		
Coding B gray e.g., control applications					
Coding E or F Coding E: KNX applications, green Coding F: special coding, light gray				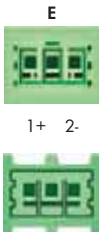	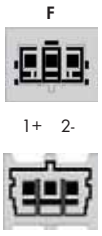
Kodierung I blue e.g., dimming					
Coding P red e.g., computer applications (UPS)					
Coding Q green "Clean Earth" applications					
Coding R Housing color: orange e.g., LON bus					
Coding S brown e.g., switching applications					

Question 1:

Can *WINSTA*® be used in low voltage range applications?

Compliance of the *WINSTA*® products with the low voltage directive is contained within the CE approval.

Question 2:

Can I wire the entire electrical installation of a functional building using *WINSTA*®?

The *WINSTA*® system allows the wiring of the entire electrical installation on both sides of the floor distributors.

Question 3:

What needs to be considered for the changeover from NYM cables for permanent installation to pluggable installation using flexible wires?

The changeover area must be fixed properly in order to protect the NYM cable from too high bending stress, in addition, all terminals must be protected against shear and tensile stress.

Question 4:

What needs to be considered when there is a concentration of *WINSTA*® cables, e.g. in a cable duct?

As a result of the heat build-up, it might be necessary to reduce the current carrying capacity or to increase the cross section from e.g. 2.5 mm^2 to 4 mm^2.

Question 5:

Where may I use *WINSTA*® for installation?

Anywhere there is enough space for connectors and cables, e.g. in cable ducts, false floors or plasterboard walls and suspended ceilings.

Question 6:

What needs to be considered if there is a cross section reduction?

The minimum conductor cross section must be adapted to the connected load. More protection measures are only required if the cable with the reduced cross section to the connected load is longer than 3 m, see VDE 0100, Nov. 1991, Part 430.

Question 7:

Are there distribution boxes with *WINSTA®* components available?

Yes. WAGO offers many distribution boxes with different functions, such as Dali Bus, Lon applications, blind control etc., ready for connection with *WINSTA®* connectors.

Question 8:

May I split a three-phase circuit when using *WINSTA®*?

It must be ensured that all three phases can be switched off at the same time, e.g. by using a 3-pole safety cutout or a 3-pole circuit breaker. *WINSTA®* offers several convenient solutions, such as three-phase to single-phase distribution connectors, distribution connectors with phase selection, intermediate couplers from 5 poles to 3 poles and customized distribution boxes.

Question 9:

What safety features does *WINSTA®* offer when designing different circuits, such as AV, SV or UPS?

WINSTA® offers connectors and distributors with different codings that are also marked in different colors for a clear differentiation. In the entire system!

Question 10:

Are there individual marking options for *WINSTA®* components?

Of course, flexible marking is part of a flexible connector system, and this is why *WINSTA®* also offers custom solutions.

Question 11:

Can I also integrate two relays in a *WINSTA®* distribution box in order to control blind motors?

Yes. It is even possible to integrate up to three 6 mm wide relays in a *WINSTA®* distribution box.

Question 12:

Is the *WINSTA®* system protected against accidental contact?

All components of the *WINSTA®* system are protected against accidental contact, hence it provides maximum safety.

WINSTA® MINI Technical Data: 890 / 891 Series

Rated voltage	250 V/4 kV/3 acc. to IEC 60664 Air and creepage distance ≥ 5.5 mm/0.216 in With strain relief ≥ 6.5 mm/0.255 in to accessible surfaces (protection class II)
Rated current	Max. 16 A, depending on the conductor cross section
Connectable conductor cross section	0.25 mm^2 to 1 mm^2 (AWG 22 - 18) solid, stranded and fine-stranded 1.5 mm^2/AWG 16 solid and fine-stranded
Contact resistance	Approx. 3 mΩ contact resistance Approx. 0.5 mΩ contact transition plug/socket
Approvals	Planned approvals: UL, CCA, LR, GL, DNV
Pending	EN / IEC 61 535
Degree of protection	In mated condition with strain relief housing: IP 20
Cable diameter	2-pole: Ø 3.8 - 8.2 mm (0.149 - 0.322 in) 3-pole: Ø 4.5 - 10.0 mm (0.177 - 0.39 in)
Mating cycles	200, without resistive load 100, without resistive load I_N = 16 A, tested (1.5 mm^2/AWG 16)
Mating and unmating forces *(socket and plug)*	Mating force: approx. 10 – 50 N (depends on number of poles) Unmating force when not locked: approx. 10 - 50 N (depends on number of poles) Retention force when locked: > 80 N
Protection against mismating	All WINSTA components are 100% protected against mismating in terms of: a.) plugging different number of poles b.) plugging when turned by 180° c.) plugging when laterally staggered d.) plugging one pole
Locking levers	All products for fixed installations (snap-in versions for lighting fixturesor devices, and distribution connector versions) are equipped with locking levers ex-factory, so that the plugs or sockets are always locked. Additional locking levers are only required for „flying leads" (plug/socket).
Materials	Connector material Insulating parts: Polyamide 6.6 V0, halogen-free (except cable) Contacts: Copper or copper alloy, surface-treated Clamping spring: Stainless steel
Continuous service temperature	≤ 85 °C PVC cable for temperatures ≤ 70 °C (including halogen-free) Insulating parts for temperatures ≤ 105 °C
General	First make/last break earth contact, no WINSTA product is compatible with any other connector system available on the market
Fire load	On request

WINSTA® MIDI Technical Data: 770 / 771 Series

Rated voltage
250 V/4 kV/3 acc. to IEC 60664 3-pole
400 V/6 kV/3 acc. to IEC 60664 4- and 5-pole
Air and creepage distance ≥ 5.5 mm/0.216 in
to accessible surfaces

Rated current
Max. 25 A, depending on the conductor cross section

Connectable conductor cross section
0.5 mm^2 to 2.5 mm^2 (AWG 20 - 14) solid, stranded and fine-stranded
4 mm^2/AWG 12 solid and fine-stranded

Contact resistance
Approx. 3 mΩ contact resistance
Approx. 0.5 mΩ contact transition plug/socket

Approvals
VDE 0628, UL, CCA, LR, GL, DNV

In preparation
EN / IEC 61 535

Degree of protection
in mated condition with strain relief housing: IP 20

Cable diameter
3-pole: Ø 4.5 - 8 mm (0.177 - 0.315 in) and
Ø 8 - 11.5 mm (0.315 - 0.452 in) and Ø 9 - 13 mm (0.354 - 0.511 in)
4-pole: Ø 9 - 13 mm (0.354 - 0.511 in)
5-pole: Ø 5 - 9 mm (0196 - 0.354 in) and
Ø 9 - 13 mm (0.354 - 0.511 in) and Ø 11.5 - 16.5 mm (0.452 - 0.649 in)
6-pole: Ø 8.5 - 13.5 mm (0.334 - 0.531 in)

Mating cycles
200, without resistive load
100, without resistive load I_N = 25 A, tested (4 mm^2/AWG 12)

Mating and unmating forces *(socket and plug)*
Mating force: approx. 30 – 70 N (depends on number of poles)
Unmating force when not locked: 30 – 70 N (depends on number of poles)
Retention force when locked: > 80 N

Protection against mismating
All WINSTA components are 100% protected against mismating in terms of:
a.) Plug-in of different number of poles
b.) plugging when turned by 180°
c.) plugging when laterally staggered
d.) plugging one pole

Locking levers
All products for fixed installations (snap-in versions for lighting fixtures or devices, all distribution connector and PCB versions) are equipped with locking levers ex-factory, so that the plugs or sockets are always locked. Additional locking levers are only required for „flying leads" (plug/socket).

Materials
Connector material
Insulating parts: Polyamide 6.6 V0, halogen-free (except cable)
Contacts: Copper or copper alloy, surface-treated
Clamping spring: Stainless steel

Continuous service temperature
≤ 85°C
PVC cable for temperatures ≤ 70°C (including halogen-free)
Insulating parts for temperatures ≤ 105°C

General
First make/last break earth contact,
no WINSTA product is compatible with any other connector system available on the market

Fire load
on request

WINSTA® MAXI Technical Data: 831 Series

Rated voltage	400 V/6 kV/3 acc. to IEC 60664 Air and creepage distance ≥ 5.5 mm/0.216 in to accessible surfaces (protection class II)
Rated current	Max. 32 A, depending on the conductor cross section
Connectable conductor cross section	0.5 mm^2 to 4 mm^2 (AWG 20 - 12) solid, stranded and fine-stranded 6 mm^2/AWG 10 solid and fine-stranded
Contact resistance	Approx. 3 mΩ contact resistance Approx. 0.5 mΩ contact transition plug/socket
Approvals	Planned approvals: UL, CCA, LR, GL, DNV
Pending	EN / IEC 61 535
Degree of protection	in mated condition with strain relief housing: IP 20
Cable diameter	5-pole: Ø 13 - 18 mm (0.51 - 0.708 in)
Mating cycles	100, without resistive load 50, with resistive load I_N = 35 A, tested (6 mm^2/AWG 10)
Mating and unmating forces *(socket and plug)*	Mating force: approx. 30 – 70 N (depends on number of poles) Unmating force when not locked: approx. 30 – 70 N (depends on number of poles) Retention force when locked: > 80 N
Protection against mismating	All WINSTA components are 100% protected against mismating in terms of: a.) Plug-in of different number of poles b.) plugging when turned by 180° c.) plugging when laterally staggered d.) plugging one pole
Locking levers	Sockets are equipped with locking levers ex-factory, so that the plugs are always locked.
Materials	Connector material Insulating parts: Polyamide 6.6 V0, halogen-free (except cable) Contacts: Copper or copper alloy, surface-treated Clamping spring: Stainless steel
Continuous service temperature	≤ 85°C PVC cable for temperatures ≤ 70°C (including halogen-free) Insulating parts for temperatures ≤ 105°C
General	First make/last break earth contact, no WINSTA product is compatible with any other connector system available on the market
Fire load	On request

Rated voltage	250 V/4 kV/3 acc. to IEC 60664 Air and creepage distance ≥ 5.5 mm/0.216 in to accessible surfaces (protection class II)
Rated current	Max. 20 A, depending on the conductor cross section
Connectable conductor cross section	1.5 mm^2 to 2.5 mm^2 (AWG 16 - 14) fine-stranded
Contact resistance	Approx. 3 mΩ contact resistance Approx. 0.5 mΩ contact transition plug/socket
Approvals	Planned approvals: VDE 0628, UL, CCA, LR, GL, DNV
Pending	EN / IEC 61 535
Degree of protection	in mated condition with strain relief housing: IP 20
Cable diameter	fixed diameter 3 x 1.5 mm^2/AWG 16, Ø 8.2 mm/0.322 in 3 x 2.5 mm^2/AWG 14, Ø 10 mm/0.393 in 4 x 1.5 mm^2/AWG 16, Ø 9.2 mm/0.362 in
Mating cycles	200, without resistive load 100, without resistive load I_N = 20 A, tested (2.5 mm^2/AWG 14)
Mating and unmating forces *(socket and plug)*	Mating force: approx. 30 – 70 N (depends on number of poles) Unmating force when not locked: 30 – 70 N (depends on number of poles) Retention force when locked: > 80 N
Protection against mismating	All WINSTA components are 100% protected against mismating in terms of: a.) Plug-in of different number of poles b.) plugging when turned in the wrong way round c.) plugging when laterally staggered
Locking levers	Locking levers are generally at the socket
Materials	Connector material Insulating parts: Polyamide 6.6 V0, halogen-free (except cable) Contacts: Copper or copper alloy, surface-treated Clamping spring: Stainless steel
Continuous service temperature	≤ 85°C PVC cable for temperatures ≤ 70°C (including halogen-free) Insulating parts for temperatures ≤ 105°C
General	First make/last break earth contact, no WINSTA product is compatible with any other connector system available on the market
Fire load	On request

WINSTA® KNX

Technical Data: 893 / 894 Series

Rated voltage	50 V/0.8 kV/3 Air and creepage distance ≥ 5.5 mm/0.216 in
Rated current	3 A
Connectable conductor cross section	0.5 mm^2/AWG 20 solid
Contact resistance	Approx. 5 mΩ contact resistance
Approvals	EIB manual
Degree of protection	in mated condition with strain relief housing: IP 20
Cable diameter	Ø 5 - 7 mm (0.196 - 0.275 in)
Mating cycles	200
Mating and unmating forces *(socket and plug)*	Mating force: approx. 10 – 15 N Unmating force when not locked: approx. 15 – 20 N
Materials	Insulating parts: Polyamide 6.6 V0, halogen-free (except cable) Contacts: Copper alloy, surface-treated
Continuous service temperature	≤ 85 °C PVC cable for temperatures ≤ 70 °C (including halogen-free) Insulating parts for temperatures ≤ 105 °C
Fire load	On request

WINSTA® IDC Technical Data: 772 Series

Rated voltage	250 V/4 kV/3 acc. to IEC 60664 3-pole 400 V/6 kV/3 acc. to IEC 60664 5-pole Air and creepage distance ≥ 5.5 mm/0.216 in
Rated current	Max. 25 A, depending on the conductor cross section
Connectable conductor cross section	0.5 mm^2 to 2.5 mm^2 (AWG 20 - 14) solid, stranded and fine-stranded 4 mm^2/AWG 12 solid and fine-stranded
Contact resistance	Approx. 3 mΩ contact resistance Approx. 0.5 mΩ contact transition plug/socket
Approvals	Planned approvals: UL, CCA, LR, GL, DNV
Pending	EN / IEC 61 535
Degree of protection	in mated condition with strain relief housing: IP 20
Cable diameter	5-pole strain relief: Ø 8 - 13 mm (0.315 - 0.511 in) 5-pole strain relief: Ø 11.5 - 16.5 mm (0.452 - 0.649 in)
Mating cycles	200, without resistive load 100, without resistive load I_N = 25 A, tested (4 mm^2/AWG 12)
Mating and unmating forces *(socket and plug)*	Mating force: approx. 30 – 70 N (depends on number of poles) Unmating force when not locked: approx. 30 – 70 N (depends on number of poles) Retention force when locked: > 80 N
Protection against mismating	All WINSTA components are 100% protected against mismating in terms of: a.) Plug-in of different number of poles b.) plugging when turned by 180° c.) plugging when laterally staggered d.) plugging one pole
Locking levers	All versions are equipped with locking levers ex-factory, so that the plugs are always locked.
Materials	Insulating parts: Polyamide 6.6 V0, halogen-free (except cable) Contacts: Copper or copper alloy, surface-treated Clamping spring: Stainless steel
Continuous service temperature	≤ 85°C PVC cable for temperatures ≤ 70°C (including halogen-free) Insulating parts for temperatures ≤ 105°C
General	First make/last break earth contact, no WINSTA product is compatible with any other connector system available on the market
Fire load	On request

Approvals – User Guide

Updated approvals can be found at www.wago.com

• 1: Select "Country"

e.g., Germany

• 2: Select "Products"

Select "Approvals"

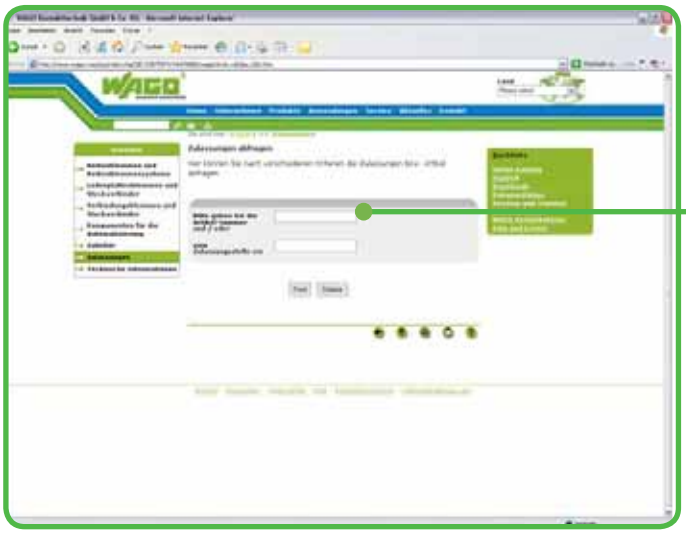

• 3: "Search for Approvals"

Here, you can search the approvals and items according to defined criteria.

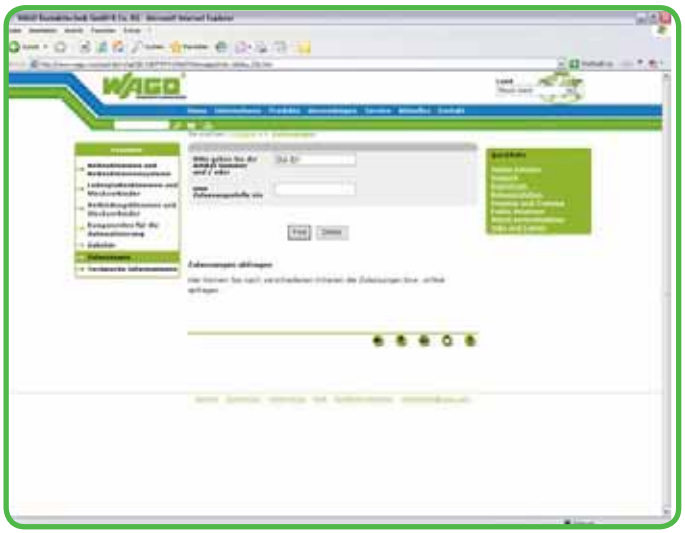

• 4: Entry Options

a) Item Number
e.g., 264-301
b) Certification Agency
e.g., "UL"
c) Certification Agency and Item Number Range; e.g., "280 - 6" and "UL"

Artikel No.	Zulassungs-stelle	Zulassungs Nr.	Spannung [V]	Strom [A]	Querschnitt [mm²]
264-301	DNV	E7569	800	24	2,5
264-301	GL	17295-00HH	800	24	2,5
264-301	KEMA	2079569.04	800		2,5
264-301	KR	HMB05880-EL002	800	24	
264-301	LR	91/20242(E3)	800	24	2,5
264-301	RMR	11130002	800	24	2,5
264-301	RosTest	B09523	800	24	2,5
264-301	SEMKO	9404012			2,5
264-301	UL	E45172	600	20	28-12
264-301	VDE	3945ÜG,BL.2	660		2,5

Search Result a)
Item Number:

All approvals related to that product will be displayed.

Artikel No.	Zulassungs-stelle	Zulassungs Nr.	Spannung [V]	Strom [A]	Querschnitt [mm²]
2001-1201	UL	E45172	600	15	22-14
2001-1202	UL	E45172	600	15	22-14
2001-1203	UL	E45172	600	15	22-14
2001-1204	UL	E45172	600	15	22-14
2001-1205	UL	E45172	600	15	22-14
2001-1206	UL	E45172	600	15	22-14
2001-1207	UL	E45172			22-14
2001-1301	UL	E45172	600	15	22-14
2001-1302	UL	E45172	600	15	22-14
2001-1303	UL	E45172	600	15	22-14

Search Result b)
Certification Agency:

All products approved by that agency will be displayed.

Artikel No.	Zulassungs-stelle	Zulassungs Nr.	Spannung [V]	Strom [A]	Querschnitt [mm²]
280-601	UL	E45172	600	20	28-12
280-602	UL	E45172	600	20	28-12
280-603	UL	E45172	600	20	28-12
280-604	UL	E45172	300	15	28-12
280-606	UL	E45172	300	10	28-12
280-607	UL	E45172			28-12
280-610	UL	E45172	300	10	28-12
280-612	UL	E45172	300	15	28-12
280-616	UL	E45172	300	10	28-12
280-621	UL	E45172	600	15	28-12

Search Result c)
Certification Agency and Item Numbers:

The whole range of products approved by that agency will be displayed.

Item Number Index

Item no.	Page
206 Series	
206 - 118	125
206 - 124	125
206 - 125	125
206 - 126	125
206 - 127	125
206 - 128	125
210 Series	
210 - 333	127
210 - 334	127
210 - 619	124
210 - 620	124
210 - 621	124
210 - 622	124
210 - 635	124
210 - 636	124
770 Series	
770 - 100	127
770 - 101	24
770 - 103	24
770 - 104	44
770 - 105	56
770 - 111	24
770 - 113	24
770 - 114	44
770 - 115	56
770 - 121	24
770 - 123	24
770 - 124	44
770 - 125	56
770 - 131	24
770 - 133	24
770 - 134	44
770 - 135	56
770 - 201	24
770 - 203	25
770 - 204	45
770 - 205	57
770 - 213	25
770 - 213/002 - 00030	
770 - 214	45
770 - 215	57
770 - 221	24
770 - 223	25
770 - 224	45
770 - 225	57
770 - 233	25
770 - 233/002 - 00030	
770 - 234	45
770 - 235	57
770 - 243	25
770 - 244	45
770 - 245	57
770 - 253	25
770 - 254	45
770 - 255	57
770 - 305	58
770 - 315	58
770 - 325	58
770 - 335	58
770 - 401	24
770 - 405	59
770 - 408	31
770 - 415	59
770 - 418	31
770 - 425	59
770 - 428	31
770 - 435	59
770 - 438	31
770 - 503	26
770 - 503/021 - 000	27
770 - 503/023 - 000	26
770 - 503/032 - 000	27
770 - 504	46
770 - 504/023 - 000	46
770 - 505	60
770 - 505/021 - 000	61
770 - 505/023 - 000	60
770 - 506/029 - 000	80
770 - 507/047 - 000	81
770 - 513	26
770 - 513/021 - 000	27
770 - 513/023 - 000	26
770 - 513/032 - 000	27
770 - 514	46
770 - 514/023 - 000	46
770 - 515	60
770 - 515/021 - 000	61
770 - 515/023 - 000	60
770 - 516/029 - 000	80
770 - 517/047 - 000	81
770 - 523	26
770 - 601	35
770 - 603	34
770 - 605	66
770 - 606	34
770 - 607	36
770 - 608	36
770 - 609	67
770 - 611	70
770 - 615	34
770 - 617	67
770 - 619	66
770 - 620	67
770 - 621	67
770 - 622	67
770 - 623	35
770 - 625	67
770 - 626	52
770 - 627	52
770 - 629/101 - 000	78
770 - 629/102 - 000	78
770 - 631/100 - 000	79
770 - 631/104 - 000	79
770 - 631/106 - 000	79
770 - 631/107 - 000	79
770 - 631/109 - 000	79
770 - 631/110 - 000	79
770 - 631/111 - 000	79
770 - 631/112 - 000	79
770 - 632/138 - 000	79
770 - 633	35
770 - 634	35
770 - 635	35
770 - 636	35
770 - 637	37
770 - 638	37
770 - 640	68
770 - 643	28
770 - 644	48
770 - 645	62
770 - 653	34
770 - 655	66
770 - 656	34
770 - 657	36
770 - 658	36
770 - 659	67
770 - 661	70
770 - 665	34
770 - 667	34
770 - 670	34
770 - 671	67
770 - 672	67
770 - 673	35
770 - 675	67
770 - 676	52
770 - 677	52
770 - 681/100 - 000	79
770 - 681/104 - 000	79
770 - 681/106 - 000	79
770 - 681/107 - 000	79
770 - 681/109 - 000	79
770 - 681/110 - 000	79
770 - 681/111 - 000	79
770 - 681/112 - 000	79
770 - 682/138 - 000	79
770 - 683	35
770 - 684	35
770 - 685	35
770 - 686	35
770 - 687	37
770 - 688	37
770 - 690	68
770 - 693	28
770 - 694	48
770 - 695	62
770 - 703	28
770 - 703/009 - 000	28
770 - 704	48
770 - 705	62
770 - 713	29
770 - 713/007 - 000	29
770 - 714	49
770 - 714/007 - 000	49
770 - 715	63
770 - 715/007 - 000	63
770 - 723	28
770 - 723/009 - 000	28
770 - 724	48
770 - 725	62
770 - 733	29
770 - 733/007 - 000	29
770 - 734	49
770 - 734/007 - 000	49
770 - 735	63
770 - 735/007 - 000	63
770 - 743	28
770 - 744	48
770 - 745	62
770 - 753	29
770 - 754	49
770 - 755	63
770 - 803	32
770 - 803/011 - 000	33
770 - 804	50
770 - 804/011 - 000	51
770 - 805	64
770 - 805/011 - 000	65
770 - 813	32
770 - 813/011 - 000	33
770 - 814	50
770 - 814/011 - 000	51
770 - 815	64
770 - 815/011 - 000	65
770 - 823	32
770 - 823/011 - 000	33
770 - 824	50
770 - 824/011 - 000	51
770 - 825	64
770 - 825/011 - 000	65
770 - 833	32
770 - 833/011 - 000	33
770 - 834	50
770 - 834/011 - 000	51
770 - 835	64
770 - 835/011 - 000	65
770 - 843	32
770 - 843/011 - 000	33
770 - 844	50
770 - 844/011 - 000	51
770 - 845	64
770 - 845/011 - 000	65
770 - 853	32
770 - 853/011 - 000	33
770 - 854	50
770 - 854/011 - 000	51
770 - 855	64
770 - 855/011 - 000	65
770 - 901	66
770 - 902	66
770 - 903	66
770 - 907	36
770 - 934	35
770 - 936	35
770 - 940	68
770 - 951	66
770 - 952	66
770 - 953	66
770 - 967	34
770 - 970	34
770 - 1105	57
770 - 1115	57

Item no.	Page
770 - 1303	25
770 - 1305	57
770 - 1313	25
770 - 1315	57
770 - 1324	45
770 - 1325	57
770 - 1334	45
770 - 1335	57
770 - 1343	25
770 - 1353	25
770 - 1363	25
770 - 1373	25
770 - 1373/146 - 000	30
770 - 1373/147 - 000	30
770 - 1373/148 - 000	30
770 - 1373/149 - 000	30
770 - 2105	62
770 - 2115	63
770 - 2115/007 - 000	63
770 - 2303	28
770 - 2305	62
770 - 2313	29
770 - 2313/007 - 000	29
770 - 2315	63
770 - 2324	48
770 - 2325	62
770 - 2334	49
770 - 2334/007 - 000	49
770 - 2335	63
770 - 2335/007 - 000	63
770 - 2343	28
770 - 2353	29
770 - 2363	28
770 - 3105	64
770 - 3105/011 - 000	65
770 - 3115	64
770 - 3115/011 - 000	65
771 Series	
771 - 8965/007 - ...	71
771 - 8965/017 - ...	71
771 - 8965/107 - ...	71
771 - 8965/117 - ...	71
771 - 8973/2 ..- ...	40
771 - 8993/1004 - 051	41
771 - 9973/006 - ...	39
771 - 9973/007 - ...	43
771 - 9973/016 - ...	39
771 - 9973/017 - ...	43
771 - 9973/106 - ...	39
771 - 9973/107 - ...	43
771 - 9973/116 - ...	39
771 - 9973/117 - ...	43
771 - 9973/206 - ...	39
771 - 9973/207 - ...	43
771 - 9973/216 - ...	39

Item no.	Page
771 - 9973/217 - ...	43
771 - 9975/006 - ...	74
771 - 9975/007 - ...	77
771 - 9975/016 - ...	74
771 - 9975/017 - ...	77
771 - 9975/106 - ...	74
771 - 9975/107 - ...	77
771 - 9975/116 - ...	74
771 - 9975/117 - ...	77
771 - 9975/206 - ...	74
771 - 9975/207 - ...	77
771 - 9975/216 - ...	74
771 - 9975/217 - ...	77
771 - 9985/006 - ...	73
771 - 9985/007 - ...	76
771 - 9985/016 - ...	73
771 - 9985/017 - ...	76
771 - 9985/106 - ...	73
771 - 9985/107 - ...	76
771 - 9985/116 - ...	73
771 - 9985/117 - ...	76
771 - 9985/206 - ...	73
771 - 9985/207 - ...	76
771 - 9985/216 - ...	73
771 - 9985/217 - ...	76
771 - 9993/006 - ...	38
771 - 9993/007 - ...	42
771 - 9993/016 - ...	38
771 - 9993/017 - ...	42
771 - 9993/106 - ...	38
771 - 9993/107 - ...	42
771 - 9993/116 - ...	38
771 - 9993/117 - ...	42
771 - 9993/206 - ...	38
771 - 9993/207 - ...	42
771 - 9993/216 - ...	38
771 - 9993/217 - ...	42
771 - 9993/306 - ...	40
771 - 9993/406 - ...	40
771 - 9993/805 - ...	41
771 - 9994/006 - ...	54
771 - 9994/016 - ...	54
771 - 9994/106 - ...	54
771 - 9994/116 - ...	54
771 - 9994/206 - ...	54
771 - 9994/216 - ...	54
771 - 9995/006 - ...	72
771 - 9995/007 - ...	75
771 - 9995/016 - ...	72
771 - 9995/017 - ...	75
771 - 9995/106 - ...	72
771 - 9995/107 - ...	75
771 - 9995/116 - ...	72
771 - 9995/117 - ...	75
771 - 9995/206 - ...	72
771 - 9995/207 - ...	75
771 - 9995/216 - ...	72
771 - 9995/217 - ...	75

Item no.	Page
772 Series	
772 - 260	104
772 - 261	104
772 - 262	105
772 - 263	105
772 - 267	104
772 - 268	105
772 - 269	105
774 Series	
774 - 9993/006 - ...	88
774 - 9993/007 - ...	89
774 - 9993/016 - ...	88
774 - 9993/017 - ...	89
774 - 9993/106 - ...	88
774 - 9993/107 - ...	89
774 - 9993/116 - ...	88
774 - 9993/117 - ...	89
774 - 9993/206 - ...	88
774 - 9993/207 - ...	89
774 - 9993/216 - ...	88
774 - 9993/217 - ...	89
774 - 9994/006 - ...	90
774 - 9994/016 - ...	90
774 - 9994/106 - ...	90
774 - 9994/116 - ...	90
774 - 9994/206 - ...	90
774 - 9994/216 - ...	90
831 Series	
831 - 3105/019 - 004	84
831 - 3105/019 - 050	84
831 - 3205/020 - 004	84
831 - 3205/020 - 050	84
888 Series	
888 - 0402/0510 - 0000	127
890 Series	
890 - 102	10
890 - 103	16
890 - 111	10
890 - 112	10
890 - 113	16
890 - 122	10
890 - 123	16

Item no.	Page
890 - 131	10
890 - 132	10
890 - 133	16
890 - 202	11
890 - 203	17
890 - 212	11
890 - 213	17
890 - 222	11
890 - 223	17
890 - 232	11
890 - 233	17
890 - 242	11
890 - 243	17
890 - 252	11
890 - 253	17
890 - 392	124
890 - 393	124
890 - 502	11
890 - 503	17
890 - 512	11
890 - 513	17
890 - 523	16
890 - 601	13
890 - 606	19
890 - 615	19
890 - 623	19
890 - 634	19
890 - 636	19
890 - 642	12
890 - 643	18
890 - 656	19
890 - 665	19
890 - 673	19
890 - 684	19
890 - 686	19
890 - 692	12
890 - 693	18
890 - 702	12
890 - 703	18
890 - 712	12
890 - 713	18
890 - 722	12
890 - 723	18
890 - 732	12
890 - 733	18
890 - 742	12
890 - 743	18
890 - 752	12
890 - 753	18
890 - 1102	11
890 - 1112	11
890 - 2102	12
890 - 2112	12
890 - 1606	13
890 - 1615	13
890 - 1617	13
890 - 1620	13
890 - 1622	13

Item Number Index

Item no.	Page
890 - 1634	13
890 - 1636	13
890 - 1656	13
890 - 1665	13
890 - 1672	13
890 - 1684	13
890 - 1686	13
891 Series	
891 - 8992/005 - ...	14
891 - 8992/015 - ...	14
891 - 8992/105 - ...	14
891 - 8992/115 - ...	14
891 - 8992/205 - ...	14
891 - 8992/215 - ...	14
891 - 8992/006 - ...	15
891 - 8992/016 - ...	15
891 - 8992/106 - ...	15
891 - 8992/116 - ...	15
891 - 8992/206 - ...	15
891 - 8992/216 - ...	15
891 - 8993/005 - ...	20
891 - 8993/015 - ...	20
891 - 8993/105 - ...	20
891 - 8993/115 - ...	20
891 - 8993/205 - ...	20
891 - 8993/215 - ...	20
893 Series	
893 - 121	112
893 - 122	113
893 - 129	113
893 - 261	108
893 - 262	109
893 - 269	109
893 - 1002	94
893 - 1012	94
893 - 1022	95
893 - 1032	95
893 - 1606	98
893 - 1656	99
893 - 2002	96
893 - 2012	96
893 - 2022	97
893 - 2032	97

Item no.	Page
894 Series	
894 - 8992/033 - 106	100
894 - 8992/033 - 107	101
894 - 8992/033 - 306	100
894 - 8992/033 - 307	101
894 - 8992/033 - 506	100
894 - 8992/033 - 507	101
894 - 8992/133 - 106	100
894 - 8992/133 - 107	101
894 - 8992/133 - 306	100
894 - 8992/133 - 307	101
894 - 8992/133 - 506	100
894 - 8992/133 - 507	101
894 - 8992/233 - 106	100
894 - 8992/233 - 107	101
894 - 8992/233 - 306	100
894 - 8992/233 - 307	101
894 - 8992/233 - 506	100
894 - 8992/233 - 507	101
895 Series	
895 - 1051	118
895 - 1052	118
895 - 1601	120
895 - 1602	120
895 - 1603	120
895 - 1604	120
895 - 1605	120
895 - 1651	120
895 - 1652	120
896 Series	
896 - 231	116
896 - 232	116
896 - 233	117
896 - 234	117
897 Series	
897 - 120	114
897 - 121	114
897 - 122	114
897 - 230	117
897 - 231	117
897 - 232	117
897 - 250	106
897 - 251	106
897 - 253	106
897 - 260	107
897 - 261	107

Item no.	Page
897 - 262	107
897 - 453	107
897 - 839	116
897 - 859	118
897 - 878	106
897 - 900	106
897 - 901	121
897 - 931	126
897 - 951	126
897 - 952	126
897 - 970	126
897 - 971	126
897 - 972	126
897 - 1050	119
897 - 1051	119
897 - 1052	119
897 - 1650	121
897 - 1651	121
897 - 1652	121

Item no.	Page

Item no.	Page

Item no.	Page

Item no.	Page

INDEX

Catalog
Catalog (page)

A

Actuator and actuator LED terminal blocks
– Rail-mounted terminal blocks 1
Actuator cables 3, 4
Additional modules for matrix patchboards 1
Addressing tool 3
Alternate comb type jumper bars 1
Analog input modules 3
Analog output modules 3
Analog signal conditioning modules, pluggable 4
AND gate modules
– pluggable 4
Angled female connectors
see *"MULTI CONNECTION SYSTEM"*, 100% protected against mismating, standard version 2
Angled support brackets 1, 3, 4
Antenna (SMA plug) 3, 4, 5 (78)
Approvals 1, 2, 3, 4
AS-Interface I/O system 3
AS-Interface master module 3
AS-Interface power supply unit 3, 4
AS-Interface slaves 3
A/D converters in DIN-rail mountable enclosures 4

B

Back-up capacitor module 3, 4
BACnet controller 3
Banana plugs 1
Binary spacer module 3
Bistable switching relays
– DIN-rail mountable 4
– pluggable 4
Block I/O SYSTEM 3
Bluethooth I/O module 3
Bridge rectifiers 4
Building automation 3
Busbar terminal blocks 1

Catalog
Catalog (page)

C

Cable assemblies
– *WINSTA®* MINI 5 (14, 20)
– *WINSTA®* MIDI 5 (38, 54, 72)
– *WINSTA®* RD 5 (88)
– *WINSTA®* KNX 5 (100)
Cable harness support 1
Cable marking 3, 4
Cables and connectors 3, 4
Cables and connectors for fieldbus systems 3
CAGE CLAMP® connection 1, 2
CAGE CLAMP®S connection 1, 2, 5 (7)
CAL® fieldbus components 3
CANopen® fieldbus components 3
Carrier rails 1, 3, 4
Carrier/Receptacle terminal blocks, f.-e., as double/triple deck terminal blocks X-COM®-SYSTEM 1
CC-Link fieldbus coupler 3
CC-Link fieldbus connector 3
CD ELECTRONICC Tools and Docs 3, 4
CE marking 1, 2, 3, 4
Changeover modules, pluggable 4
Changeover rocker switch 4
Codings, *WINSTA®* 5 (146 - 147)
Collective carrier for jumpers 1
Comb type jumper bars 1
Combi PCB terminal blocks 2
Combi strip 2
Commissioning software 3, 4
Common potential matrix patchboards 1
Commoning strips for PCB terminal strips 2
Compact terminal blocks
see "Miniature (rail-mounted) terminal blocks"
Compact terminal strips 1
Companies and representations WAGO worldwide 1, 2, 3, 4, 5 (168)
Computer marking 1, 2, 3, 4
Condition monitoring 3
Configuration cable 3
Configuration files 3
Connecting cable 3, 4
Connection modules for sensors and actuators 4
Connection of aluminum wires 1
Connector system, 10 or 20 poles 2
Connector, pluggable 3
Connectors for KNX bus coupler units 2
Connectors
– wire-tap branch ; 3- and 6-pole (elevator shaft technology) 2
– for KNX applications 2, 5 (92 - 101)
– 10- or 20-pole connectors for racks 2
– for PCBs 2, 5 (32, 50, 64)
– *MULTI CONNECTION SYSTEM* 2
– *WINSTA®* 5
– X-COM®-SYSTEM 1, 2

Catalog
Catalog (page)

Constant voltage sources,
– DIN-rail mountable 3, 4
Contact paste "Alu-Plus" 1, 2
Converter, DC/DC
– DIN-rail mountable 4
– Rail-mounted terminal block 4
Converters, 10 Bit A/D, D/A in DIN-rail-mountable enclosure 4
Cover for rail-mounted terminal blocks 1
Crimping tools for ferrules 1, 2
Current-carrying capacity curves
– X-COM®-SYSTEM 1, 2
– *MULTI CONNECTION SYSTEM* 2
Current flow monitoring modules, plugable 4

D

DALI/DSI master module 3
Data exchange coupler 3
Data exchange module 3
DC/DC converters
– Terminal blocks 4
– DIN-rail mountable 4
Decade marker carrier 1
Decentralized building automation 3
Derating curves
see "current-carrying capacity curves"
Device connectors
– *WINSTA®* MINI 5 (12, 18)
– *WINSTA®* MIDI 5 (28, 48, 62)
DeviceNet® fieldbus components 3
Differencial inputs and differential measurement inputs,
see "Analog input modules" 3
Digital impulse interface 3
Digital input modules 3
Digital output modules 3
Diode double deck terminal blocks, f.-e. 1
Diode gate modules,
– DIN-rail mountable 4
– pluggable 4
Diode modules, for carrier or through terminal blocks, pluggable 1
Diode triple deck terminal blocks, f.-e. 1
Diode terminal blocks, f.-e. 1
Disconnect terminal blocks, f.-e., angled type, with movable disconnect slide link, knife disconnect horizontal type, double deck terminal blocks, with disconnect tab 1

Catalog
Catalog (page)

Disconnect terminal blocks for test and measurement, f.-e., angled type (for current or voltage transformer circuits), horizontal type, with movable knife disconnect, disconnect tab 1
Disconnect terminal blocks for test and measurement, s.-e. 1
Distribution cables (sensor/actuator) 3, 4
Distribution connectors, *WINSTA®*
– MINI 5 (13, 19)
– MIDI 5 (34, 52, 67)
– KNX 5 (98, 99)
Distribution terminal blocks, f.-e. 1
see "topJob® multilevel installation terminal blocks"
DLL MODBUS®/TCP software 3
Documentation 3, 4
Double deck headers *MULTI CONNECTION SYSTEM* 2
Double deck terminal blocks, f.-e. Diode terminal blocks, LED terminal blocks 1
Double deck terminal strips for PCBs 2
Double pin headers see *MULTI CONNECTION SYSTEM MIDI* 2
Double potential terminal blocks, f.-e. for matrix patching 1
Down counter see "Up/down counters"
D/A converters in DIN-rail mountable enclosures 4
D-Sub fieldbus connector 3

E

EC directives 1
EDS files see "Configuration files"
Electronic modules 4
Electronic terminal blocks with pluggable miniature switching relays 4
Empty component plug housings for building custom circuits
– on terminal blocks for pluggable modules 4
– on rail-mounted terminal blocks 4
Empty housings for building custom circuits 4
Enclosures for WAGO-I/O-SYSTEM 750 3
End module 3
End stops
– for DIN 15 rail 1
– for DIN 35 rail 1, 3, 4

Catalog
Catalog (page)

EnOcean switches 3, 4
EnOcean technology 3, 4
ETHERNET® fieldbus components 3
Ex e II Double potential through terminal blocks, f.-e. 1
Ex e II Miniature ground (earth) conductor terminal blocks, for DIN 15 and DIN 35 rails 1
Ex e II Miniature through terminal blocks, f.-e., for DIN 15 and DIN 35 rails 1
Ex e II Modular terminal blocks and terminal strips, with fixing flanges or snap-in mounting feet, f.-e., s.-e. 1
Ex e II PCB terminal blocks 2
Ex e II Through terminal blocks, f.-e., angled type, topJob®, TOPJOB®S, horizontal type 1
Ex i Fieldbus modules 3
Ex i Terminal blocks see "Through terminal blocks"
Extended input voltage and operating temperature range 4
8-level terminal blocks for matrix patching and potential terminal blocks 1

F

Fault indicator modules, pluggable 4
Feedthrough terminal strips
– for PCBs 2
Ferrules 1, 2
Female and male connectors see "Connectors; e.g., for racks"
Female connectors
see *MULTI CONNECTION SYSTEM* 2
see X-COM®-SYSTEM 1,2
Female sockets for elevator shaft technology 2
Female terminal blocks 2
Field side connection module 3
Field side power supply filter module 3
Fieldbus components 3
Fieldbus controllers 3
Fieldbus couplers 3
Fieldbus plugs 3
Filter modules 3
Firewire fieldbus coupler 3
FIT CLAMP connection (IDC) 1
Flat cable systems 5 (102 - 121)
Flip-Flop module 4

Catalog
Catalog (page)

Function blocks 4
Function blocks for building automation 3
Fuse modules
– pluggable on carrier terminal blocks 1
– pluggable on receptacle terminal blocks 4
Fuse terminal blocks , f.-e., angled type for mini-automotive blade-type fuses, with pivotable fuse holder 1
Fuse terminal blocks, s.-e. 1
4-level terminal blocks for matrix patching and potential terminal blocks 1
4-conductor terminal strips for electrical devices 1
4-conductor terminal blocks see "Through terminal blocks, ground (earth) conductor terminal blocks, etc."

G

Gate modules
– DIN-rail mountable 4
– pluggable 4
Ground (earth) conductor disconnect terminal blocks, f.-e. 1
Ground (earth) conductor disconnect terminal blocks, s.-e. 1
Ground (earth) conductor terminal blocks, angled type, f.-e., supply terminal blocks, topJob® (rail-mounted) terminal blocks, horizontal type, f.-e., 4 mm² double deck terminal blocks triple deck terminal blocks TOPJOB®S rail-mounted) terminal blocks 1
Ground (earth) conductor terminal blocks, miniature
– for DIN 15 and DIN 35 rails 1
Ground (earth) conductor terminal blocks with IDC connection (FIT CLAMP) 1
Ground (earth) conductor terminal blocks, s.-e., high current 1
Group marker carriers 1, 3, 4
GSD files see "Configuration files"

f.-e. = front-entry s.-e. = side-entry

Catalog
Catalog (page)

H

Headers and male connectors
MULTI CONNECTION SYSTEM 2
X-COM®-SYSTEM 1, 2
Headers for double deck assembly
MULTI CONNECTION SYSTEM 2
High current PCB terminal blocks and terminal strips 2
h-distribution connectors
– WINSTA® MINI 5 (13, 19)
– WINSTA® MIDI 5 (35)

I

IDC connection (FIT CLAMP) 1
IEC/EN specifications 1, 3, 4
Incremental encoder interface 3
Indicator modules
see "LED gate modules, connectors, terminal blocks"
Industrial compact PC 3
Input voltage range, extended 4
Installation distribution terminal blocks
see also "Multilevel installation terminal blocks"
Insulation stops for matrix patchboards, rail-mounted terminal blocks, terminal strips 1
INTERBUS® fieldbus components 3
Interface modules 4
– for sensors and actuators 4
– for ETHERNET 4
– for ERNI mating connector 4
– for Harting mating connector 4
– for Siemens-SIMATIC 4
– for connectors 4
– with header 4
– with subminiature D connectors 4
Interface software 3
Intermediate coupler, *WINSTA®*
– MIDI 5 (34, 66)
Internal data bus extension modules 3
Intruder detection see
"Digital input modules" 3
Isolation amplifier 4
Item number index 1, 2, 3, 4, 5 (158)
I/O enclosures 3
I/O modules
see WAGO-I/O-SYSTEM 3
I/O modules for severe conditions
– WAGO-I/O-SYSTEM 755 3
I/O system 3
II/O-LIGHTBUS fieldbus components 3

Catalog
Catalog (page)

J

Jumpers for rail-mounted terminal blocks
– Step-down jumpers,
– staggered jumpers
– Push-in type wire jumpers 1
JUMPFLEX 4
Junction and distribution connectors, MICRO for KNX applications 2

K

KNX applications
– MICRO junction and distribution connectors 2
– Connectors (bus coupler units)
2, 5 (92 - 101, 113)
KNX IP controller 3
KNX/EIB/TP1 module 3

L

Lamp demonstration connector
("Service" connectors) 1
Lamp test circuit gate modules
– DIN-rail mountable 4
Laterally movable marking system 1
LED and neon indicator modules, pluggable 1
LED double deck terminal blocks, f.-e. 1
LED gate modules,
– DIN-rail mountable 4
– pluggable 4
LED terminal blocks, f.-e. 1
LED triple deck terminal blocks, f.-e. 1
Lighting connectors 1
Lighting control DALI/DSI 3
Lighting protection 4
Locking levers
– *WINSTA®* MINI 5 (10)
– *WINSTA®* MIDI 5 (24)
Lockout cap, *WINSTA®*
– MINI 5 (12, 18)
– MIDI 5 (24, 28, 44, 48, 56, 62)
Lockout caps 2
Longitudinal disconnect terminal blocks 1
LONWORKS® fieldbus components 3

Catalog
Catalog (page)

M

Magnetic antenna 3, 4
Male and female connectors
see "Connectors; e.g., for racks"
Manual operation module 4
Manuals for fieldbus components 3
Marker branches 1
Marker cards
– (Miniature WSB cards) Miniature WAGO Quick marking system 1, 2, 3, 4
– Self-adhesive strips computer marked 1
– (WMB cards) WAGO Multi marking system 1, 2, 3, 4
– (WSB cards) WAGO Quick marking system 1, 2, 4
Marker cards
for WAGO group marker carriers 1, 3, 4
Marker carriers 1
Marker strips, self-adhesive 2
Marker tags 1
Marking 1, 2, 3, 4, 5 (127)
Marking pen with fiber tip 1, 2, 3, 4
Material specification for insulation materials, contact materials, contact surface 1
Measurement and disconnect terminal blocks
see "Disconnect terminal blocks for test and measurement"
MICRO junction and distribution connectors for KNX applications 2
MICRO push-wire connectors for junction boxes 1
Miniature ground (earth) conductor terminal blocks, f.-e.
for DIN 15 and DIN 35 rails 1
Miniature switching relays 4
Miniature through terminal blocks, f.-e.
for DIN 15 and DIN 35 rails 1
Miniature WSB Quick marking system (marker cards) 1, 2, 3, 4
MODBUS® fieldbus components 3
Modular feed-through terminal blocks 2
Modular I/O system
WAGO-I/O-SYSTEM 750 3
Modular PCB female connectors 2
Modular PCB terminal blocks
– Fuse and disconnect/test terminal blocks
– f.-e. and s.-e., high current
– 1-conductor, 2-conductor 2
Modular terminal blocks
– with screw-clamp connection 2
Modular terminal blocks and terminal strips with fixing flanges or snap-in mounting feet, f.-e., s.-e. 1
Modular test plug adapters
see "Test plug adapters"
Modular test plugs
with CAGE CLAMP®S connection 1
Modules for building custom circuits 4

Catalog
Catalog (page)

Modules for sensors and actuators
– DIN-rail mountable 4
Modules in DIN-rail mountable enclosure
– Manual control module 4
– Radio receiver 4
– Switching relays 4
– for building custom circuits 4
Monitoring modules,
current flow monitoring 4
Mounting accessories 1
Mounting carrier,
– for isolated mounting on DIN 35 rail 1
– *MULTI CONNECTION SYSTEM* 2
Mounting carriers and mounting feet
for DIN-rail mounting PCBs 4
Mounting carriers for push-wire connectors
243 Series, 273 Series 1

Mounting plates,
for *WINSTA*® distribution connectors
– MINI 5 (12, 18)
– MIDI 5 (34, 36, 66, 68, 70)
– IDC 5 (104)
Multi-port device taps for DeviceNet 3
MULTI CONNECTION SYSTEM
– MICRO 100% protected against mismating
Pin spacing 2.5 mm 2
– MIDI 100% protected against mismating
Pin spacing 5 mm PressIn technique 2
– MIDI standard
Pin spacings: 5 mm, 5 mm reflow soldering,
5.08 mm, 7.5 mm, 7.62 mm 2
– MINI 100% protected against mismating
Pin spacings: 3.5 mm,
3.5 mm PressIn technique,
3.5 mm reflow soldering, 3.81 mm,
3.81 mm PressIn technique 2
Multifunction timing relay, pluggable 4
Multilevel installation terminal blocks, topJob® 1
Multilevel PCB terminal strips
Double deck, triple deck, quadruple deck
terminal strips 2
Multilevel rail-mounted terminal blocks
Double deck, triple deck, quadruple deck
terminal blocks 1
Multilevel terminal blocks, topJob® terminal blocks
see "Multilevel installation terminal blocks"
Multirange timing relay, pluggable 4

N

Neon indicator modules 1
N-conductor disconnect terminal blocks, topJob® 1

Catalog
Catalog (page)

O

OPC Server for MODBUS-/TCP 3
Operating stickers 1, 2
Operating tool 1, 2, 3, 4, 5 (124)
Optocouplers
– Rail-mounted terminal blocks 4
– Pluggable modules 4
Order forms on request

P

Parameterization files
see "Configuration files"
Parameterizing software 3, 4
Patching systems
– Common potential matrix patchboards,
terminal blocks for matrix patching
(3-conductor double potential through
terminal blocks)
– Terminal blocks for matrix patching and
same potential terminal blocks
(4-level terminal blocks, 8-level terminal blocks)
– Matrix patchboards with CAGE CLAMP®
connection 1
PCB feedthrough connectors
see *MULTI CONNECTION SYSTEM* 2
PCB female connectors 2
PCB terminal blocks and terminal strips, with
CAGE CLAMP® connection,
PressIn technique,
reflow soldering,
with screw clamp connection,
with push-wire connection 2
Pin modules for rail-mounted terminal blocks
for Wire-Wrap or Termin-Point connections 1
Pluggable connector 3
Pluggable fuse modules
– for carrier terminal blocks 1
– for receptacle terminal blocks 4
– for double/triple deck terminal blocks 1
Pluggable on carrier terminal blocks 4
Plugs for elevator shaft technology 2
PressIn technique
PCB terminal strips 2
MULTI CONNECTION SYSTEM
3.5 mm, 3.81 mm, 5 mm 2
Pre-assembled cable 3, 4
Primary switch mode power supply units 3, 4
PROFIBUS® fieldbus components 3
PROFINET I/O fieldbus components 3
PROFIsafe, safety modules 3

Catalog
Catalog (page)

Programmable fieldbus controllers 3
Programming interface, wireless 3
ProServe
WAGO services 1, 2, 3, 4
Power supplies
– Constant voltage sources 3, 4
– Power supply units, DIN-rail mountable 3, 4
– Power supply units, in shielded-metal housing 3, 4
PT 100 analog input module 3
Pulse width output module 3
Push buttons 2
Push-in type wire jumpers
for rail-mounted terminal blocks 1
Push-wire connection 1, 2
Push-wire connectors
for KNX applications 2
Push-wire connectors for junction boxes 1
Push-wire connectors for junction boxes, MICRO 1

Q

Quadruple deck terminal strips
for PCBs 2
Quadruple deck rail-mounted terminal blocks
(for fast electric motor wiring) 1

R

Radio adapter 3
Radio receiver in DIN-rail mountable enclosure 4
Radio receiver in the *WINSTA* box 4, 5 (78)
Radio receiver module 3
Railway applications 4
Rail-mounted modules
for building custom circuits 4
Rail-mounted spacer blocks 1, 2
Rail-mounted terminal blocks for fast electric motor
wiring (quadruple deck) 1
Rail-mounted terminal blocks
with CAGE CLAMP® connection,
CAGE CLAMP® COMPACT connection,
CAGE CLAMP®S connection,
FIT CLAMP (IDC) connection 1
– with coupler function 4
– with overvoltage protection 4
– for building custom circuits 4

f.-e. = front-entry s.-e. = side-entry

Catalog
Catalog (page)

Reflow soldering
PCB connectors
MULTI CONNECTION SYSTEM:
3.5 mm, 5 mm 2
Relay modules
– in DIN-rail mountable enclosure 4
– Terminal blocks 4
– with miniature switching relay 4
– DIN-rail mountable 4
– pluggable 4
Relay output modules 3
Relay sockets
– DIN-rail mountable 4
– with miniature switching relay 4
Repeater power supply 4
Resistance sensors 3
Resistive temperature device (RTD) input module 3
Resistor bridges (strain gauge) 3
Resistor gate modules
– DIN-rail mountable 4
RJ-45 connectors 3
RS-232 serial interface 3
RS-485 serial interface 3
RTC module 3

S

Safety modules 3
Safety relays, DIN-rail mountable 4
Sales regions, worldwide 1, 2, 3, 4, 5 (168)
Same potential terminal blocks and terminal blocks for matrix patching
4-level terminal blocks,
8-level terminal blocks 1
Screwdrivers 1, 2, 3, 4, 5 (124)
Secondary connection modules 1
Seminars 3, 4
Sensor cable 3, 4
Sensor terminal blocks and sensor LED terminal blocks
Rail-mounted terminal blocks 1
Sensor/Actuator boxes 3, 4
Separation module 3
Serial interface 3
Service and programming software
WAGO-I/O-SYSTEM 759 3
"Service" connectors 1
Services "ProServe" 1, 2, 3, 4
Shield (screen) connecting system
Shield (screen) clamping saddle 1, 3, 4
Shield (screen) terminal blocks,
angled type, f.-e.,
topJob® (rail-mounted) terminal blocks
horizontal type,
triple deck terminal blocks 1

Catalog
Catalog (page)

Signal splitter 4
Snap-in connectors, *WINSTA®*
– MINI 5 (12, 18)
– MIDI 5 (28, 48, 62)
Software
– "WAGO SCRIPT" 1, 2
– "WAGO frame" 3, 4
Software for building installation
WAGO-I/O-SYSTEM 759 3
Software tool 3
Spacers for sensor
and actuator terminal blocks 1
Specialty I/O modules 3
Specifications
– IEC/EN 1, 2, 3, 4
– UL-Underwriters Laboratories USA
– Tests and test procedures per UL standards 1, 2
SSI transmitter interface 3
Staggered jumpers
for rail-mounted terminal blocks 1
Stepper module 3
Step-down jumpers for
through terminal blocks, f.-e., s.-e. 1
Strain relief housings
for *MULTI CONNECTION SYSTEM*
MIDI and *MINI* 2
for *WINSTA®*
– MINI 5 (11, 17)
– MIDI 5 (26, 46, 60, 80)
Strain relief plates
for female plugs and male connectors
with CAGE CLAMP® connection 1
for *MULTI CONNECTION SYSTEM*
MICRO, MIDI, MINI 2
Stripping knife for flat cables 5 (126)
Stripping tools 1, 2, 3, 4, 5 (125)
Subsidiaries and representations
WAGO worldwide 1, 2, 3, 4, 5 (168)
Surge suppression modules
– as rail-mounted terminal blocks 4
– Terminal blocks 4
– pluggable 4
Supply terminal blocks,
1-conductor ground (earth) terminal block,
N-disconnect terminal blocks 1
Supply module 3
Supply modules,
WINSTA® IDC 5 (104, 108, 112, 116, 118, 120)
Switching modules, pluggable changeover 4
Switching relay modules
– Rail-mounted terminal blocks 4
– in DIN-rail mountable enclosure 4
– DIN-rail mountable 4
– pluggable 4
System I/O modules 3
S0 interface 4

Catalog
Catalog (page)

T

T marker tag 1
T-distribution connectors
– *WINSTA®* MINI 5 (13, 19)
– *WINSTA®* MIDI 5 (34, 52, 67)
– *WINSTA®* KNX 5 (98)
Tap-off modules
WINSTA® IDC 5 (105, 109, 113, 116, 118, 120)
Technical information,
– general 1, 2, 3, 4, 5 (144)
– hazardous areas 1, 3, 4
Technical support 3, 4
Telecontroller 3
Temperature range, extented 4
Temperature transducers,
pluggable modules 4
Terminal block marking 1, 2
Terminal blocks for pluggable modules, f.-e. 4
Terminal blocks with surge suppression devices 4
Terminal blocks
(terminal blocks for pluggable modules) 4
Terminal strips and modular
terminal blocks with fixing flanges
or snap-in mounting feet, f.-e. and s.-e. 1
Terminal strips
for electrical devices 1
Terminal strips for PCBs
with locking slide,
double deck version,
triple deck version,
quadruple deck version,
f.-e. and s.-e.,
PressIn technique,
Reflow soldering,
high current version,
with finger operated levers,
1-conductor,
2-conductor 2
Test plug adapters for
– 255, 256, 257 Series
PCB Terminal Blocks 2
– Miniature rail-mounted terminal blocks,
rail-mounted terminal blocks 1
Test plugs for
MULTI CONNECTION SYSTEM MIDI 2
Testboy 1, 2
Tests and testing procedures
Electrical tests, environmental tests,
mechanical tests, material tests 1
Thermocouple 3
Through terminal blocks, f.-e.
– angled type
– for transformer circuits
– suitable for fuse terminal blocks
– for automative blade-type fuses
– topJob® (rail-mounted) terminal blocks
– horizontal type
– 5 mm/0.197 in wide; 4 mm²/AWG 10
– double/triple deck terminal blocks
– for pluggable modules

Catalog
Catalog (page)

Through terminal blocks, f.-e.
– with diodes or LED
– TOPJOB®S (rail-mounted) terminal blocks
– distribution terminal blocks 1
Through terminal blocks, miniature
for DIN 15 and DIN 35 rails 1
Through terminal blocks with
IDC connection (FIT CLAMP) 1
Through terminal blocks, s.-e., high current 1
Timer relay modules
– pluggable 4
Tools 1, 2, 3, 4, 5 (122 - 127)
topJob® terminal blocks
– Through terminal blocks
– Multilevel installation terminal blocks
– N-conductor disconnect terminal blocks
– Shield (screen) terminal blocks
– Ground (earth) terminal blocks
– Distribution terminal blocks
(see "Multilevel installation terminal blocks")
– Tools 1
TOPJOB®S
– Terminal blocks with CAGE CLAMP®S
connection
– Through terminal blocks
– Ground (earth) terminal blocks
– Modular test plugs 1
Training 3, 4
Transducers for thermocouples and PT 100 4
Transformer terminal blocks 1
see "Disconnect terminal blocks for test and
measurement"
Transient suppression devices
– Terminal blocks 4
– Pluggable modules 4
Transverse switching terminal blocks 1
Triple deck installation terminal blocks
see topJob®
Triple deck terminal blocks, f.-e.
Diode terminal blocks, LED terminal blocks 1
Triple deck terminal strips
for PCBs 2
TTY interface 3
Twin ferrules 4

10 or 20-pole connectors;
e.g., for racks 1
3-conductor double potential terminal blocks 1
3-conductor terminal blocks
see "Through terminal blocks,
ground (earth) conductor terminal blocks, etc."
2-conductor female connectors,
MULTI CONNECTION SYSTEM
100% protected against mismating,
standard version 2
2-conductor terminal blocks
see "Through terminal blocks,
ground (earth) conductor terminal blocks, etc."

Catalog
Catalog (page)

U

UL specifications
Underwriters Laboratories USA 1, 2
Up/down counters 3
User manual on
fieldbus components 3

V

Variable resistor terminal blocks, f.-e- 1
Vibration velocity/bearing condition monitoring 3
Voltage sources, constant 4
Voltage tester 1, 2, 3, 4

W

WAGO
– Worldwide 1, 2, 3, 4, 5 (168)
WAGO CAGE CLAMP® connection 1, 2, 3, 4
WAGO CAGE CLAMP®S connection 1, 2
WAGO I/O-CHECK 3
WAGO-I/O-IPC 3
WAGO-I/O-PRO 3
WAGO-I/O-SYSTEM, fieldbus components 3
WAGO OPC 3
WAGO "ProServe" 1, 3, 4
WAGO SCRIPT 1, 2
WAGO services 1, 2, 3, 4
WAGO Speedway 3
WCB Combi marking system 1
WFB Continuous marking strips 1
WINSTA® 2, 4, 5
Wire cutter 1, 2, 3, 4, 5 (125)
Wire jumpers for rail-mounted terminal blocks
– push-in type 1
Wire marking 3, 4
Wireless technology 3, 4
Wiring aid, *WINSTA®* 5 (127)
Wire-tap branch connectors;
e.g., in elevator shaft technology 2
WMB Inline 4
WMB Multi marking system 1, 2, 3, 4
WSB Quick marking system 1, 2, 4

Catalog
Catalog (page)

X

X-COM®-SYSTEM
– Receptacle terminal blocks,
– Female plugs,
– Male connectors with CAGE CLAMP®
connection,
– Headers with solder pins 1

f.-e. = front-entry s.-e. = side-entry

WAGO Worldwide – Companies and Representations –

Argentina
Bruno Schillig S.A.
Arenales 4030, B1604CFD
Florida, PBA
Phone +54 11 4730 1100
Fax +54 11 4761 7244
robertor@schillig.com.ar

Australia
NHP ELECTRICAL ENGINEERING
PRODUCTS PTY LTD
43-67 River Street
Richmond, Victoria, 3121
P.O. Box 199
Phone +61 3 9429 2999
Fax +61 3 9429 1075
export@wago.com

Austria
WAGO Kontakttechnik Ges.m.b.H.
Laxenburger Straße 244
1230 Wien
Phone +43 1 6150780
Fax +43 1 6150775
info.at@wago.com

Belgium
WAGO Kontakttechnik
Excelsiorlaan 11
1930 Zaventem
Phone +32 2 7179090
Fax +32 2 7179099
info-be@wago.com

Bosnia and Herzegovina
WAGO Kontakttechnik GmbH & Co. KG
Representative Office Sofia Bulgaria
Twardischiki Prohod 21, ap.5
1404 Sofia
Phone +359 2 489 46 10
Fax +359 2 859 21 31
info-BG@wago.com

SC_Technik doo
Kadić Mahala 47
Bosnia-Herzegovina
Phone +387 35 821815
Fax +387 35 821816
sc_technik@yahoo.de

Brasil
WAGO Eletroeletrônicos Ltda
Rua Américo Simões 1470
Sãu Roque da Chave
Itupeva SP Brasil 13295-000
Phone +55 11 4591 0199
Fax +55 11 4591 0190
info.br@wago.com

Bulgaria
WAGO Kontakttechnik GmbH & Co. KG
Representative Office Sofia Bulgaria
Twardischiki Prohod 21, ap.5
1404 Sofia
Phone +359 2 489 46 10
Fax +359 2 859 21 31
info-BG@wago.com

RIM Project Ltd.
Probuda - 12 A str., et. 7
Sofia
Bulgaria
Phone +359 2 9310666
Fax +359 2 9313839
office@rim-bg.com

Canada
please contact WAGO USA

Chile
Desimat Chile
Av Puerto Vespucio 9670
Pudahuel Santiago
Phone +56 2 7470152
Fax +56 2 7470153
ventaschile@desimat.cl

China
WAGO ELECTRONIC (TIANJIN) Co. LTD
No.5, Quan Hui Road
Wuqing Development Area
Tianjin 301700
Phone +86 22 59617688
Fax +86 22 59617668
info-cn@wago.com

Columbia
T.H.L. Ltda.
Cra. 49 B # 91-33
Bogotá
Phone +57 1 621 85 50
Fax +57 1 621 60 28
ventas-thl@thl-ltda.com

Croatia
M.B.A. d.o.o. za trgovinu i zastupanje
Frana Supila 5
51211 Matulji HR
Phone +00385 51 275-736
Fax +00385 51 275-066
mba@ri.htnet.hr

Czech Republic
WAGO Elektro spol. sr. o.
Rozvodova 1116/36
143 00 Praha 4 - Modřany
Phone +420 261 090 143
Fax +420 261 090 144
info.cz@wago.com

Denmark
WAGO Danmark
Filial of WAGO Kontakttechnik GmbH &Co. KG
Lejrvej 29
3500 Værløse
Phone +45 44 357777
Fax +45 44 357787
salg.dk@wago.com

Ecuador
INSETEC CIA. LTDA.
El Zurriago 177 y El Vengador
P.O. Box 17-16-016
Quito
Phone +593 2 2 26 91 48
Fax +593 2 2 46 18 33
g.castro@insetec.com.ec

Egypt
IBN Engineering Instrumentation & Control
71 a El Shaheed Ahmed Hamdi St.
King Faisal, Giza
Phone +20 2 7214350
Fax +20 2 7221709
sales@ibnengineering.com

Estland
Eltarko OÜ
Laki 14 - 502
10621 Tallinn
Phone +372 651 7731
Fax +372 651 7786
andres@eltarko.ee

Finland
WAGO Kontakttechnik GmbH & Co. KG
Filial i Finland
Vellamonkatu 30 B
00550 Helsinki
Phone +358 9 7744 060
Fax +358 9 7744 0660
export@wago.com

France
WAGO CONTACT S.A.
Paris Nord 2
83 Rue des Chardonnerets
B.P. 55065 - Tremblay en France
95947 - ROISSY CDG CEDEX
Phone +33 1 48172590
Fax +33 1 48632520
info-fr@wago.com

Germany
WAGO Kontakttechnik GmbH & Co. KG
Postfach 28 80 32385 Minden
Hansastrasse 27
32423 Minden
Phone +49 571 887-0
Fax +49 571 887-169
info@wago.com

Great Britian
WAGO Limited
Triton Park, Swift Valley Industrial Estate
RUGBY
Warwickshire, CV21 1SG
Phone +44 1788 568008
Fax +44 1788 568050
uksales@wago.com

Greece
PANAGIOTIS SP. DIMOULAS - BIOMAT
Kritis Str. 26
10439 Athen
Phone +30 210 883 3337
Fax +30 210 883 4436
export@wago.com

Hong Kong
National Concord Eng., Ltd.
Unit A-B, 5/F.
Southeast Industrial Building
611-619 Castle Peak Road
Tsuen Wan, N.T.
Phone +852 24292611
Fax +852 24292164
sales@nce.com.hk

Hungary
WAGO Hungá¡ria KFT
Ipari Park, Gyár u. 2
2040 Budapest
Phone +36 23 502-170
Fax +36 23 502-166
info@wago.hu

Iceland
S. Gudjonsson ehf.
Audbrekku 9-11
202 Kopavogur
Phone +354 520-4500
Fax +354 520-4501
export@wago.com

India
WAGO & CONTROLS (INDIA) LTD.
C-27, Sector-58, Phase-III
Noida-201 301
Gautam Budh Nagar (U.P)
Phone +91 120 2 580409 10
Fax +91 120 2 580081
info@wagoindia.com

Indonesia
please contact WAGO Singapore

Iran
Patsa Industry
No. 2 Bahar St.
South Shiraz Ave
P.O. Box.: 15875-1698
14369 Tehran
Phone +98 21 8726869
Fax +98 21 8719666
export@wago.com

Ireland
Drives & Controls
Unit F4, Riverview Business Park
Nangor Road
Dublin 12
Phone +353 1 4604474
Fax +353 1 4604507
wago@drivesandcontrols.ie

Israel
Comtel Israel Electronic Solutions Ltd.
Bet Hapaamon
20 Hataas Street
P.O.Box 66
44425 Kefar-Saba
Phone +972 9 76 77 240
Fax +972 9 76 77 243
sales@comtel.co.il

Italy
WAGO ELETTRONICA SRL
Via Vittoria, 5/b
40068 San Lazzaro di Savena (BO)
Phone +39 051 6272170
Fax +39 051 6272174
info-ita@wago.com

Japan
WAGO Co. of JAPAN Ltd.
Nittetsu ND-Tower Building 4F
Kameido 1-5-7
Koto-Ku
Tokyo 136-0071
Phone +81 3 5627 2050
Fax +81 3 5627 2055
info-jp@wago.com

Korea
Mahani Electric Co. Ltd.
792-7 Yeoksam-Dong
Kangnam-Gu, 135-080
Seoul, Korea
Phone +82 2 2194 3300
Fax +82 2 2194 3397
export@wago.com

Kosovo
please contact WAGO Bulgaria

Kuwait
Kuwait Controls Company
Al Sour Street, Above Lufthansa Airline
Safat Kuwait 13062
Phone +965 822 522
Fax +965 243 3698

Latvia
INSTABALT LATVIA SIA
Vestienas iela 6
Rīga, LV-1035
Phone +371 790 1188
Fax +371 790 1180
info@instabalt.lv

Lebanon
G.T.C.
Antonine Project – Block G
P.O.BOX 70-1096 Antelias
Lebanon
Phone +961 4 521 029
Fax +961 4 521 029
rgemayel@inco.com.lb

Lithuania
INSTABALT LIT UAB
Savanorių 187
Vilnius, 2053
Phone +370 52 322 295
Fax +370 52 322 247
info@instabalt.lt

Luxembourg
please contact WAGO Belgium

Macedonia
please contact WAGO Bulgaria

Malaysia
WAGO Representative Office Malaysia
No 806, Block A4, Leisure Commerce Square,
No 9, Jalan PJS 8/9, 46150 Petaling Jaya,
Selangor Darul Ehsan, Malaysia
Phone +60 3 7877 1776
Fax +60 3 7877 2776
kian.guan.tan@wago.com

HPH Materials (M) Sdn Bhd
No. 4, Jalan Nilam 1/6
Suban Hi-Tech Industrial Park
40000 Shah Alam
Selangor, D.E. Malaysia
Phone +60 3 5638 2213
Fax +60 3 5638 8213
info@hphmaterials.com

Setia Raya Teknik Sdn. Bhd.
40 & 42 Jalan SS15/4
Subang Jaya, 47500 P.J.
Selangor D.E. Malaysia
Phone +60 3 5633 5511
Fax +60 3 5633 3411
sales@setiaraya.com.my

Mexico
WAGO CORPORATION
N120 W19129 Freistadt Road
Germantown, WI 53022
Phone +52 55 26 44 69 16
Fax +52 55 26 44 69 15
Toll-Free: 001-800-309-5975
info.mx@wago.com

Netherlands
WAGO Nederland
van Leeuwenhoekstraat 20-1
3846 CB Harderwijk
Phone +31 341 439039
Fax +31 341 439030
info-nl@wago.com

New Zealand
NHP NZ
7 Lockhart Place
Mt Wellington
New Zealand
Phone +64 9 2761967
Fax +64 9 2761992
export@wago.com

Norway
WAGO Norge NUF
Jerikoveien 20
1067 Oslo
Phone +47 22 30 94 50
Fax +47 22 30 94 51
info.no@wago.com

Peru
Desimat Peru
Av. E. Salazar Barreto No. 280
Surco - Lima 33
Phone +51 1 2731892
Fax +51 1 2720054
export@wago.com

Philippines
please contact WAGO Singapore

Poland
WAGO ELWAG sp. z o. o.
ul. Piękna 58 a
50-506 Wrocław
Phone +48 71 3604670 78
Fax +48 71 3604699
wago.elwag@wago.com

Portugal
MORGADO & CA. LDA - SEDE
Estrada Exterior da
Circunvalação 3558/3560
Apartado 1057
4435 Rio Tinto
Phone +351 22 9770600
Fax +351 22 9770699
export@wago.com

Romania
WAGO Kontakttechnik GmbH & Co. KG
WAGO Representative Office Bucharest
Str. Nicolae G. Caramfil Nr. 26, Bl. 1D, Et. 3, Ap. 7, Sect. 1
Bucuresti
Romania
Phone +40-(0)31 421 85 68
Fax +40-(0)21 232 02 31
titus.reus@wago.com

VDR & Servicii srl
Str. Valeriu Branişte, nr. 60, ap.1, sector 3
Romania
Phone +40 21 3225074/76
Fax +40 21 3225075
office@componente-automatizari.ro

SC Civitronic SRL
Str. Prof. Gh. Longinescu Nr. 7
Timisoara, Romania
Phone +40 356 710 600
Fax +40 356 814 343
sales@civitronic.ro

Russia
OOO WAGO Kontakt Rus
Gostinichny proezd 4B
127106 Moscow
Russia
Phone +7 495 9874790
Fax +7 495 9874791
info.ru@wago.com

Saudi Arabia
Al Quraishi Electrical Services of S. A.
P.O. Box 7386
Dammam-31462
Phone +966 3 85 725 37
Fax +966 3 85 725 41
export@wago.com

Serbia
WAGO Kontakttechnik GmbH & Co. KG
Representative Office Sofia Bulgaria
1404 Sofia
Phone +359 2 489 46 10
Fax +359 2 859 21 31
info-BG@wago.com

AVALON Partners D.O.O.
Str. Nemanjina 4/XII
11000 Belgrade / Serbia
Phone +381 11 268 53 11
Fax +381 11 268 41 78
Tel/Fax: 65 AVALONP
office@avalon.co.yu

Singapore
WAGO Electronic Pte Ltd
10 Upper Aljunied Link, # 04-04
York International, Industrial Building
Singapore 367904
Phone +65 62866776
Fax +65 62842425
info.sing@wago.com

Slovakia
WAGO Elektrik spol.s r. o
Odborárska 52
83102 Bratislava
Phone +421 2 44458301
Fax +421 2 44458301
export@wago.com

South Africa
Shorrock Automation (Pty) Ltd
Postnet Suite # 219
Private Bag X 8,Elardus Park
0047 PRETORIA
Phone +27 12 3454449
Fax +27 12 3455145
sales@shorrock.co.za

Spain
DICOMAT S.L.
Avda. de la Industria, 36
Apartado Correos, 1.178
28108-Alcobendas (Madrid)
Phone +34 91 6621362
Fax +34 91 6610089
info@dicomat.com

Sweden
WAGO Sverige
WAGO Kontakttechnik GmbH
Tyskland Filial
Box 639, 17527 Järfälla
Datavägen 9 A, 17543 Järfälla
Phone +46 858410680
Fax +46 858410699
info.se@wago.com

Switzerland
WAGO CONTACT SA
Rte. de l Industrie 19
Case Postale 168
1564 Domdidier
Phone +41/26 676 75 86
Fax +41/26 676 75 01
info.switzerland@wago.com

Syria
Zahabi Co.
8/5 Shouhadaa St., P.O. Box 8262
Aleppo
Phone +963 21 21 22 235 / 6
Fax +963 21 21 24 768
export@wago.com

Taiwan R.O.C.
WAGO Taiwan
8/F., No. 48, Jing-An Road
Chung-Ho City, 23556
Taipei Hsien. T a i w a n
Phone +886 2 2244 2569
Fax +886 2 2244 2658
info.taiwan@wago.com

Thailand
WAGO Representative Office Thailand
4th Floor, KS Building
213/6-8 Rachada-Phisek Road
Dingdaeng Bangkok 10320
Phone +66 2 6935611
Fax +66 2 6935612
wago@asianet.co.th

US Power Distribution Co., Ltd.
4th Floor K.S. Building
213/6-8 Rachada Phisek Road
Ding Daeng, Bangkok 10400
Phone +66 2 2763040
Fax +66 2 2763049
wago@asianet.co.th

Turkey
WAGO Elektronik Sanayi ve Ticaret Ltd. Şti.
Barbaros Mahallesi Mimar Sinan Caddesi No 169
34746 Yenisahra - Kadıköy Istanbul
Turkey
Phone +90 216 472 1133
Fax +90 216 472 9910
info.tr@wago.com

United Arab Emirates (UAE)
Binghalib Engineering Ent.
Trading Division
Al Khabeshi Area
P.O. Box 14743
Dubai
Phone +971 4 2674555
Fax +971 4 2674117
export@wago.com

USA
WAGO Corporation
N120 W19129 Freistadt Road
Germantown, WI 53022
Phone +1 262 255 6222
Fax +1 262 255 3232
Toll-Free: 1-800 DIN Rail (346-7245)
info.us@wago.com

Venezuela
PETROBORNAS, C.A.
Av. Principal UD 304-Zona Ind. Los Pinos
C.C. Los Pinos-Local E
8015-Puerto Ordaz-Edo, Bolivar
Phone +58 286 994 3406
Fax +58 286 994 5249
info@petrobornas.net

Vietnam
please contact WAGO Singapore

Version: 06/2008
Current addresses at www.wago.com

51208697 · 0888-6005/0001-3601 · WINSTA® · 2008/2009 · E · 08/08 · JA 81086 · Printed in Germany · Subject to design changes

4 045454 652968

WAGO®
INNOVATIVE CONNECTIONS