A Dimensions: [mm]

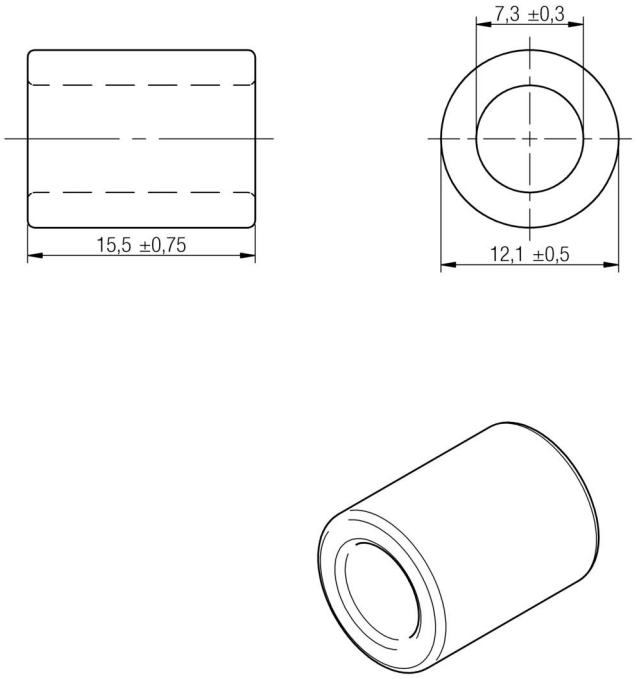

Scale - 2:1

B Applicable Cable Diameter: [mm]

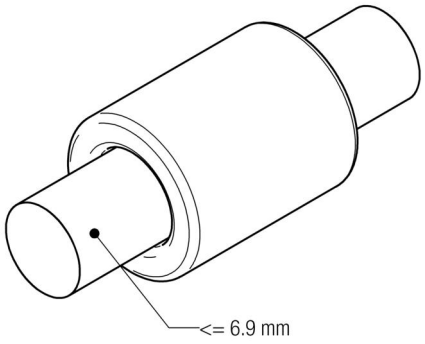

Scale - 2:1

D Electrical Properties:

Properties	Test conditions		Value	Unit	Tol.
Impedance @ 25 MHz 1 turn	25 MHz	Z	85	Ω	±25%
Impedance @ 100 MHz 1 turn	100 MHz	Z	160	Ω	±25%
Impedance @ 25 MHz 2 turns	25 MHz	Z	326	Ω	typ.
Impedance @ 100 MHz 2 turns	100 MHz	Z	454	Ω	typ.

E General information:

- Storage Temperature (before assembly): -20°C to +60°C
- Operating Temperature: -25°C to +125°C
- Test conditions of Electrical Properties: 20°C, 33% RH if not specified differently

REV	DATE	BY	CHECKED
5.5	2014-06-10	SSt	SSt
5.4	2013-12-19	SSt	SSt
5.3	2013-04-22	SSt	SSt
5.2	2012-11-28	SSt	SSt
5.1	2012-10-18	SSt	SMu
5.0	2012-09-27	SSt	SMu
4.0	2006-06-28	SMu	-

Projection

Würth Elektronik eiSos GmbH & Co. KG
EMC & Inductive Solutions
Max-Eyth-Str. 1
74638 Waldenburg
Germany
Tel. +49 (0) 79 42 945 - 0
www.we-online.com
eiSos@we-online.com

DESCRIPTION

WE-AFB EMI Suppression Axial Ferrite Bead

Order.- No.

74270034

COMPLIANT RoHS&REACh WÜRTH ELEKTRONIK

SIZE A4

This electronic component has been designed and developed for usage in general electronic equipment only. This product is not authorized for use in equipment where a higher safety standard and reliability standard is especially required or where a failure of the product is reasonably expected to cause severe personal injury or death, unless the parties have executed an agreement specifically governing such use. Moreover Würth Elektronik eiSos GmbH & Co KG products are neither designed nor intended for use in areas such as military, aerospace, aviation, nuclear control, submarine, transportation (automotive control, train control, ship control), transportation signal, disaster prevention, medical, public information network etc.. Würth Elektronik eiSos GmbH & Co KG must be informed about the intent of such usage before the design-in stage. In addition, sufficient reliability evaluation checks for safety must be performed on every electronic component which is used in electrical circuits that require high safety and reliability functions or performance.

D2 General Properties:

	Properties		Value	Unit	Tol.
Cable diameter	Cable diameter		≤6.9	mm	
Ferrite core	Material		3 W 800		
Ferrite core	Initial permeability	μ_i	800		typ.
Ferrite core	Curie temperature	T_C	140	°C	typ.
Test cable	Applicable cable		AWG26		
Test cable	Applicable cable length		165	mm	

F1 Typical Impedance Characteristics:

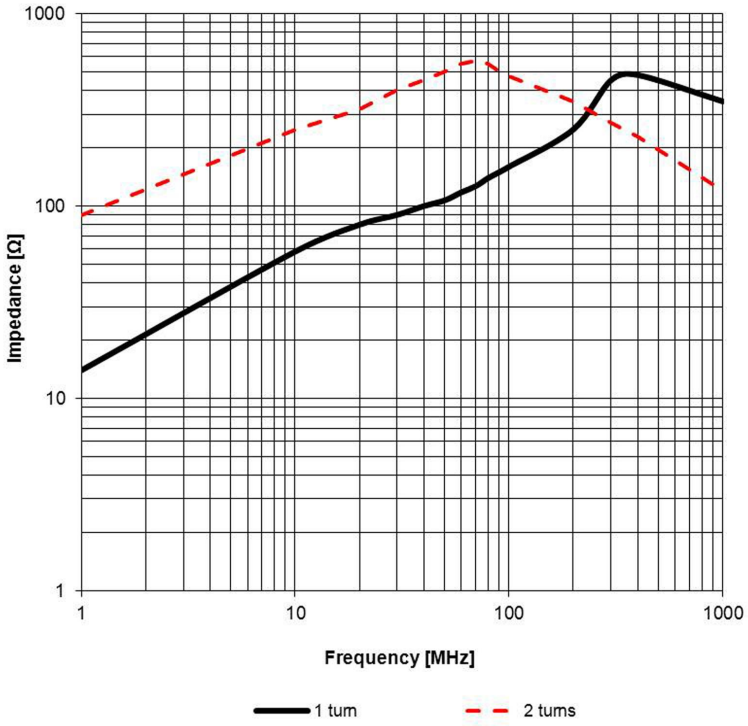

REV	DATE	BY	CHECKED
5.5	2014-06-10	SSt	SSt
5.4	2013-12-19	SSt	SSt
5.3	2013-04-22	SSt	SSt
5.2	2012-11-28	SSt	SSt
5.1	2012-10-18	SSt	SMu
5.0	2012-09-27	SSt	SMu
4.0	2006-06-28	SMu	-

Projection

Würth Elektronik eiSos GmbH & Co. KG
EMC & Inductive Solutions
Max-Eyth-Str. 1
74638 Waldenburg
Germany
Tel. +49 (0) 79 42 945 - 0
www.we-online.com
eiSos@we-online.com

DESCRIPTION

WE-AFB EMI Suppression Axial Ferrite Bead

Order.- No.

74270034

COMPLIANT RoHS&REACh WÜRTH ELEKTRONIK

SIZE A4

This electronic component has been designed and developed for usage in general electronic equipment only. This product is not authorized for use in equipment where a higher safety standard and reliability standard is especially required or where a failure of the product is reasonably expected to cause severe personal injury or death, unless the parties have executed an agreement specifically governing such use. Moreover Würth Elektronik eiSos GmbH & Co KG products are neither designed nor intended for use in areas such as military, aerospace, aviation, nuclear control, submarine, transportation (automotive control, train control, ship control), transportation signal, disaster prevention, medical, public information network etc.. Würth Elektronik eiSos GmbH & Co KG must be informed about the intent of such usage before the design-in stage. In addition, sufficient reliability evaluation checks for safety must be performed on every electronic component which is used in electrical circuits that require high safety and reliability functions or performance.

I Cautions and Warnings:

The following conditions apply to all goods within the product series of WE-AFB of Würth Elektronik eiSos GmbH & Co. KG:

General:
All recommendations according to the general technical specifications of the data sheet have to be complied with.

The usage and operation of the product within ambient conditions, which probably alloy or harm the component surface, has to be avoided.

If the product is molded in costumer applications, the molding material might shrink during and after hardening. The product is exposed to the pressure of the molding material with the effect that the ferrite body is possibly damaged by this pressure and so the electrical as well as the mechanical characteristics are endangered to be affected. After the molding material is cured, the ferrite body of the product have to be checked if any reduced electrical or mechanical functions or destructions have occurred.

The responsibility for the applicability of customer specific products and use in a particular customer design is always within the authority of the customer. All technical specifications for standard products do also apply to customer specific products.

Cleaning agents that are used to clean the customer application might damage or change the characteristics of the component or body.

The usage in acidly as well as salted environment can be the reason for oxide (rust) at the surface of the ferrite body, damage or changes at the characteristics of the material. The acidly or salted environment could have a negative effect on the long turn function of the product.

Direct mechanical impact to the product shall be prevented as the ferrite material of the ferrite body could flake or in the worst case it could break.

Product specific:
Follow all instructions mentioned in the data sheet, especially:
- Violation of the technical product specifications such as exceeding the maximal outer diameter of the cable will void the warranty.

The general and product specific cautions comply with the state of the scientific and technical knowledge and are believed to be accurate and reliable; however, no responsibility is assumed for inaccuracies or incompleteness.

REV	DATE	BY	CHECKED
5.5	2014-06-10	SSt	SSt
5.4	2013-12-19	SSt	SSt
5.3	2013-04-22	SSt	SSt
5.2	2012-11-28	SSt	SSt
5.1	2012-10-18	SSt	SMu
5.0	2012-09-27	SSt	SMu
4.0	2006-06-28	SMu	-

Projection

Würth Elektronik eiSos GmbH & Co. KG
EMC & Inductive Solutions
Max-Eyth-Str. 1
74638 Waldenburg
Germany
Tel. +49 (0) 79 42 945 - 0
www.we-online.com
eiSos@we-online.com

DESCRIPTION

WE-AFB EMI Suppression Axial Ferrite Bead

Order.- No.

74270034

COMPLIANT RoHS&REACh WÜRTH ELEKTRONIK

SIZE

A4

This electronic component has been designed and developed for usage in general electronic equipment only. This product is not authorized for use in equipment where a higher safety standard and reliability standard is especially required or where a failure of the product is reasonably expected to cause severe personal injury or death, unless the parties have executed an agreement specifically governing such use. Moreover Würth Elektronik eiSos GmbH & Co KG products are neither designed nor intended for use in areas such as military, aerospace, aviation, nuclear control, submarine, transportation (automotive control, train control, ship control), transportation signal, disaster prevention, medical, public information network etc.. Würth Elektronik eiSos GmbH & Co KG must be informed about the intent of such usage before the design-in stage. In addition, sufficient reliability evaluation checks for safety must be performed on every electronic component which is used in electrical circuits that require high safety and reliability functions or performance.

J Important Notes:

The following conditions apply to all goods within the product range of Würth Elektronik eiSos GmbH & Co. KG:

1. General Customer Responsibility
Some goods within the product range of Würth Elektronik eiSos GmbH & Co. KG contain statements regarding general suitability for certain application areas. These statements about suitability are based on our knowledge and experience of typical requirements concerning the areas, serve as general guidance and cannot be estimated as binding statements about the suitability for a customer application. The responsibility for the applicability and use in a particular customer design is always solely within the authority of the customer. Due to this fact it is up to the customer to evaluate, where appropriate to investigate and decide whether the device with the specific product characteristics described in the product specification is valid and suitable for the respective customer application or not.

2. Customer Responsibility related to Specific, in particular Safety-Relevant Applications
It has to be clearly pointed out that the possibility of a malfunction of electronic components or failure before the end of the usual lifetime cannot be completely eliminated in the current state of the art, even if the products are operated within the range of the specifications.

In certain customer applications requiring a very high level of safety and especially in customer applications in which the malfunction or failure of an electronic component could endanger human life or health it must be ensured by most advanced technological aid of suitable design of the customer application that no injury or damage is caused to third parties in the event of malfunction or failure of an electronic component.

Therefore, customer is cautioned to verify that data sheets are current before placing orders. The current data sheets can be downloaded at www.we-online.com.

3. Best Care and Attention
Any product-specific notes, cautions and warnings must be strictly observed. Any disregard will result in the loss of warranty.

4. Customer Support for Product Specifications
Some products within the product range may contain substances which are subject to restrictions in certain jurisdictions in order to serve specific technical requirements. Necessary information is available on request. In this case the field sales engineer or the internal sales person in charge should be contacted who will be happy to support in this matter.

5. Product R&D
Due to constant product improvement product specifications may change from time to time. As a standard reporting procedure of the Product Change Notification (PCN) according to the JEDEC-Standard inform about minor and major changes. In case of further queries regarding the PCN, the field sales engineer or the internal sales person in charge should be contacted. The basic responsibility of the customer as per Section 1 and 2 remains unaffected.

6. Product Life Cycle
Due to technical progress and economical evaluation we also reserve the right to discontinue production and delivery of products. As a standard reporting procedure of the Product Termination Notification (PTN) according to the JEDEC-Standard we will inform at an early stage about inevitable product discontinuance. According to this we cannot guarantee that all products within our product range will always be available. Therefore it needs to be verified with the field sales engineer or the internal sales person in charge about the current product availability expectancy before or when the product for application design-in disposal is considered.
The approach named above does not apply in the case of individual agreements deviating from the foregoing for customer-specific products.

7. Property Rights
All the rights for contractual products produced by Würth Elektronik eiSos GmbH & Co. KG on the basis of ideas, development contracts as well as models or templates that are subject to copyright, patent or commercial protection supplied to the customer will remain with Würth Elektronik eiSos GmbH & Co. KG.

Würth Elektronik eiSos GmbH & Co. KG does not warrant or represent that any license, either expressed or implied, is granted under any patent right, copyright, mask work right, or other intellectual property right relating to any combination, application, or process in which Würth Elektronik eiSos GmbH & Co. KG components or services are used.

8. General Terms and Conditions
Unless otherwise agreed in individual contracts, all orders are subject to the current version of the “General Terms and Conditions of Würth Elektronik eiSos Group”, last version available at www.we-online.com.

REV	DATE	BY	CHECKED
5.5	2014-06-10	SSt	SSt
5.4	2013-12-19	SSt	SSt
5.3	2013-04-22	SSt	SSt
5.2	2012-11-28	SSt	SSt
5.1	2012-10-18	SSt	SMu
5.0	2012-09-27	SSt	SMu
4.0	2006-06-28	SMu	-

Projection

Würth Elektronik eiSos GmbH & Co. KG
EMC & Inductive Solutions
Max-Eyth-Str. 1
74638 Waldenburg
Germany
Tel. +49 (0) 79 42 945 - 0
www.we-online.com
eiSos@we-online.com

DESCRIPTION

WE-AFB EMI Suppression Axial Ferrite Bead

Order.- No.

74270034

COMPLIANT RoHS&REACh WÜRTH ELEKTRONIK

SIZE A4

This electronic component has been designed and developed for usage in general electronic equipment only. This product is not authorized for use in equipment where a higher safety standard and reliability standard is especially required or where a failure of the product is reasonably expected to cause severe personal injury or death, unless the parties have executed an agreement specifically governing such use. Moreover Würth Elektronik eiSos GmbH & Co KG products are neither designed nor intended for use in areas such as military, aerospace, aviation, nuclear control, submarine, transportation (automotive control, train control, ship control), transportation signal, disaster prevention, medical, public information network etc.. Würth Elektronik eiSos GmbH & Co KG must be informed about the intent of such usage before the design-in stage. In addition, sufficient reliability evaluation checks for safety must be performed on every electronic component which is used in electrical circuits that require high safety and reliability functions or performance.